Sponsor	Project	Description
Corte Madera	Corte Madera Path/Echo Avenue Connector	The project is a multi-use path (MUP) connecting the Corte Madera Path at San Clemente Drive with Echo Avenue in Corte Madera. This part of the Bay Trail is a popular walking and cycling route for recreation, general transportation, and commuting to nearby schools. Pedestrians and cyclists currently use a worn, 5-foot-wide dirt path to reach Echo Avenue, letting them bypass one block of busy Paradise Drive on quieter roads and allowing neighborhood residents direct access to the Path. This unofficial trail is narrow and can be slippery when wet. A paved connector between San Clemente Drive and Echo Avenue would enhance user safety and comfort. The MUP would have a width of 8 feet with two-foot buffers, accommodating bi-directional traffic.
County of Marin	Lomita Drive Gap Closure Project	The project will construct an approximately 450' long sidedwalk along Lomita Drive east of Shell Road.Vehicles, bicycles and pedestrians all share the roadway from Shell Road to the end of road at the Horse Hill multiuse path to Corte Madera. With pedestrians walking in the roadway which is also heavliy used by cyclists, combined with the roadway's slope and sharp curve visibility is limited. The project will provide a continuous sidewalk for pedestrians between the multiuse path and the existing sidewalk that continues westward from Shell Road towards Edna Maguire School and the Mill Valley-Sausalito path.
Larkspur	Doherty Drive Safe Pathways to Schools Phase II	This project will complete the gap in pedestrian and bicycle improvements from the Riviera Circle/Redwood High School driveway to the Doherty Drive/Lucky Drive/Redwood High School driveway in the City of Larkspur. Project proposal includes: separated, ADA-accessible and paved mult-use pathway for pedestrians and bicyclists, improved connection to the multi-use trail to the east of Redwood High School, and removal of visual barriers adjacent to the project limits that reduce available sight distance.
Marin County Parks	Mill Valley Sausalito Pathway Resurfacing Project	The 1.4 mile portion of 10' wide Class 1 pathway from Gate 6 to Almonte Boulevard, has not been repaved or resurfaced since 1981. This busy pathway sees on average 2,500 users per day and over 5,000 on busy days. It serves as a key non-motorized commuter link, as well as being part of the Safe Routes to Schools, Bay Trail, and North-South Greenway routes. The southern pathway is deteriorated, with extensive longitudinal and transverse cracking, depressions, and raveling. This project will address short-term maintenance issues through a micro-surfacing and crack sealing treatment, for an overall improved pathway surface.

Ross	Laurel Grove Safe Pathways Project Phase III	The Laurel Grove Safe Pathways Project is an ongoing effort by Ross to provide a continuous and safe minimum 4' wide pathway for pedestrians walking to and from Ross School on Laurel Grove between Kentfield and Sir Francis Drake Boulevard. Laurel Grove is the only route available for pedestrians, bicyclists, and automobiles to get to/from the east side of Ross to Ross School/Common and downtown. Phase III of the project will continue south from the Phase II limits at Canyon Rd. toward the Ross Town Limit at Makin Grade. The project will require widening portions of Laurel Grove in Ross and may require some grading, retaining walls, and relocation of minor drainage facilities within the existing right of way to accommodate the pathway.
San Rafael	Grand Avenue Class IV Cycle Track	The proposed 600 foot long separated bikeway (Class IV) and sidewalk on Grand Avenue from Second Street to Fourth Street in San Rafael is top-ranked project in the Bicycle and Pedestrian Master Plan and a critical trail extension project on the San Francisco Bay Trail. This project would provide a safe and separated bicycle connection for residents and visitors of East San Rafael to the downtown business district and Bettini Transit Center. This project would carve out dedicated and protected space for pedestrians and bicyclists in the city's bustling downtown area alongside a multi-laned arterial street currently without any dedicated bicycle facilities and narrow sidewalks without buffers between pedestrians and moving vehicles.
TAM	North - South Greenway Gap Closure Project in Central Marin - Northern Segment	Caltrans, in cooperation with TAM and the City of Larkspur, propose improvements to pedestrian and bicycle facilities along the northbound Highway 101 off-ramp to Sir Francis Drake Boulevard. The improvements will include the construction of a new Class I multi-use path that would connect the Central Marin Ferry Connector bridge that crosses Sir Francis Drake Boulevard with the Pedestrian Overcrossing of Highway 101 in the City of Larkspur. The project will replace the existing narrow sidewalk along the Northbound off-ramp with a wider multi-use pathway and will improve pedestrian and bicycle access along a section of Old Redwood Highway. This project will greatly enhance safety and accessibility for non-motorized travel in central Marin.

Project Information

1. Project Sponsor

Provide the name of the agency sponsoring the project.

Town of Corte Madera

2. Project Title

50 character maximum length - the character count is in italics to the right of the input cell

Corte Madera Path/Echo Avenue Connector

3. Project Description

750 character maximum length - the character count is in italics to the right of the input cell

The project is a multi-use path (MUP) connecting the Corte Madera Path at San Clemente Drive with Echo Avenue in Corte Madera. This part of the Bay Trail is a popular walking and cycling route for recreation, general transportation, and commuting to nearby schools. Pedestrians and cyclists currently use a worn, 5-foot-wide dirt path to reach Echo Avenue, letting them bypass one block of busy Paradise Drive on quieter roads and allowing neighborhood residents direct access to the Path. This unofficial trail is narrow and can be slippery when wet. A paved connector between San Clemente Drive and Echo Avenue would enhance user safety and comfort. The MUP would have a width of 8 feet with two-foot buffers, accommodating bi-directional traffic.

4. Project Limits

750 character maximum length - the character count is in italics to the right of the input cell. If applicable, provide the names of each street, highway, or other facility with proposed improvements and the limits of the proposed improvements along each facility.

The project extends over California Department of Fish & Wildlife marshland from the Corte Madera Path, located along San Clemente Drive, to Echo Avenue in Corte Madera. The proposed multi-use path is approximately 310 feet long. However, this marks a key connector in the low-stress walking and biking network connecting Larkspur and Corte Madera, including schools such as Neil Cummins, Redwood High School, Marin Montessori, Hall Middle, Marin Country Day School, and the Cove School; Corte Madera Marsh State Park; and the Paradise Shopping Center, all less than two miles from the proposed project site.

5. Describe how this project will support equity

Describe how this project will support equity by identifying any of the following populations which may benefit from the project: Low-Income populations, Minority populations, Seniors 75 Years and Over, Zero-Vehicle Households, Level of English Proficiency, Single Parent Households, People with a Disability, or Rent-Burdened Households (the map below contains data related to the aforementioned populations within selected census tracts).

https://opendata.mtc.ca.gov/datasets/28a03a46fe9c4df0a29746d6f8c633c8_0?geometry=-130.715%2C37.123%2C-114.026%2C38.640

This project will support equity by providing an important walking and cycling connection to an Equity Priority Community. More than 13% of the residents of the census tract in which this project is located are low-income, and 21% of residents are persons of color. Additionally, almost 12% of households in the census tract do not have access to a personal vehicle. There is an affordable apartment complex located across the street and a senior living facility within a 1/2 mile of the proposed project. The Corte Madera Path/Echo Avenue Connector would make it safer and easier for community members to access education, recreation, employment, and healthy food options without the need for a vehicle.

6. Additional project information

Provide additional information related to the project for consideration during review of this application.

The Town of Corte Madera has an existing drainage easement over the California Department of Fish & Wildlife (CDFW) land where this project would be located. The Town has been in discussions with the CDFW about establishing a public access easement.

7. Project maps

If available, provide a location map showing the location of the project in the region and an area specific map showing the project limits. Maps should be submitted electronically.

8. PSR

If available, provide a copy of the PSR or PSR Equivalent as part of a complete application package.

Project Cost/Schedule/Status Information

9. Project cost, schedule and status

Provide the requested information related to the project cost, schedule and status by phase. Use the spaces below for additional cost, schedule and status information.

Project Phase	Cost	Schedule		Status
	Phase Total $ x 1,000	Begin (Mo/Yr)	End (Mo/Yr)	% Phase Complete
Scoping/Conceptual Planning	$ 5	7/2021	10/2021	10%
Environmental/Prelim. Engineering (PA&ED)	$ 5	10/2021	2/2022	0%
PS&E (Final Design)	$ 25	3/2022	6/2022	0%
Right of Way	$ 5	7/2022	9/2022	10%
Utility Relocation/Protection				
Construction	$ 175	5/2023	6/2023	0%
Construction Engineering	$ 15	6/2023	7/2023	0%
Other (enter phase name here)				
Total Estimated Costs	**$ 230**			

10. Additional cost/schedule/status information

Provide additional information related to the project cost, schedule and/or status in the space provided below. Include a list of any unresolved issues that may significantly affect the project information in the table above.

Funding

11. Funds requested

Provide the amount of funds requested for this Call for Projects. Include the phase and fiscal year associated with the requested funds. Provide the requested amounts to the nearest thousand dollars.

Funds Requested (TDA or/and TFCA, or leave blank if no preference)	Phase	Fiscal Year (to be used)		Requested Amount
	Construction	22/23		$ 175,000
			Total Funds Requested	**$ 175,000**

12. Other funds programmed

Provide the requested information related to any project funding currently programmed for this project. Be as specific as possible when entering the fund source. Include the phase and fiscal year associated with the currently programmed funds. Provide the programmed amounts to the nearest thousand dollars.

Source (TFCA, TDA, Measure A, Local General Fund, etc.)	Phase	Fiscal Year	Status of Fund (Identify as secured or pending)	Programmed Amount
Measure F Local Fund	PS&E	21/22	secured	$ 25,000
Measure F Local Fund	scoping/concept	21/22	secured	$ 5,000
Measure F Local Fund	PA&ED	21/22	secured	$ 5,000
Measure F Local Fund	ROW	22/23	secured	$ 5,000
Measure F Local Fund	Construction Engineering	22/23	secured	$ 15,000
			Existing Total Funds Programmed	**$ 55,000**

13. Additional current programming information

If applicable, provide additional information related to the funds currently programmed to the project in the space provided below. Include a list of factors or issues that may affect the availability of the programmed funds.

Funds programmed are from the local Measure F Sales Tax revenue

Contact Information

14. Project Contact

(Provide the requested information for the individual repsonsible for delivering the project and maintaining the project scope, cost and schedule.)

Contact Name:	R.J. Suokko
Contact Title:	Director of Public Works, Town of Corte Madera
Contact Telephone:	415-927-5057
Contact Fax:	
Contact Email:	RSuokko@tcmmail.org

15. Project application completed by

(Provide the requested information for the individual who completed this application. If it is the same as the Project Contact information above, enter "same.")

Name:	David Parisi
Title:	Principal, Parisi Transportation Consulting
Telephone:	(415) 649-6009
Fax:	
Email:	david@parisi-associates.com

Parisi
TRANSPORTATION CONSULTING
1936 University Ave, Ste 250
Berkeley, CA 94704
(510) 343-6400

DRAWN:	CHECKED:
AG	AL
DESIGNED:	APPROVED:
AG	AL

TOWN OF CORTE MADERA
CORTE MADERA PATH/ ECHO AVENUE CONNECTOR
CONCEPTUAL PLAN

REVISIONS	
5	
4	
3	
2	
1	
NO.	DESCRIPTION

DATE: 06/28/2021	SCALE: 1" = 20'
PTC PROJECT NO.: 18002	
DRAWING: P-1	
SHEET NO.: 1 OF 1	

CORTE MADERA PATH/ECHO AVENUE CONNECTOR

PROJECT LOCATION

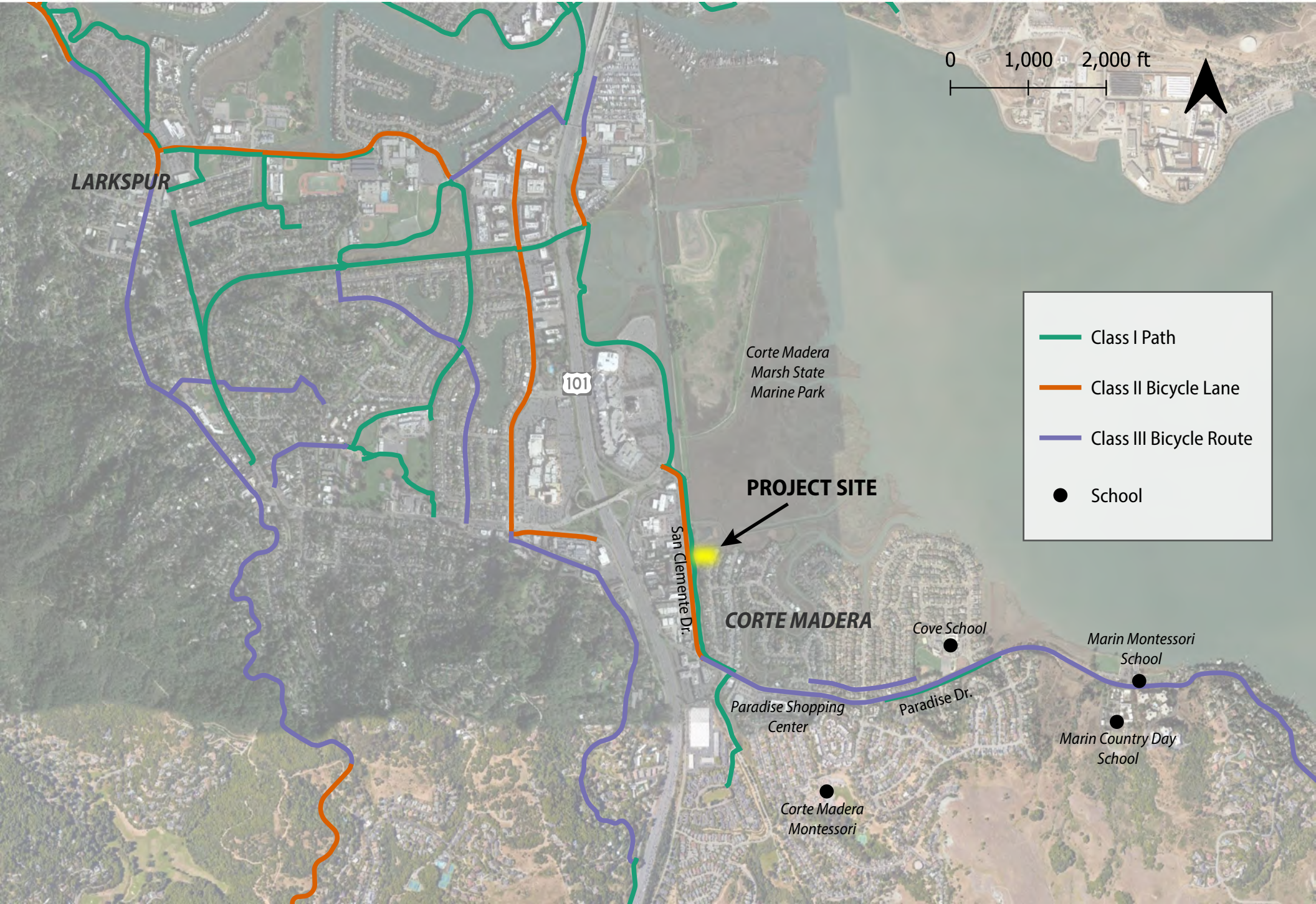

Project Information

1. Project Sponsor

Provide the name of the agency sponsoring the project.

County of Marin Department of Public Works

2. Project Title

50 character maximum length - the character count is in italics to the right of the input cell

Lomita Drive Gap Closure Project

3. Project Description

750 character maximum length - the character count is in italics to the right of the input cell

The project will construct an approximately 450' long sidedwalk along Lomita Drive east of Shell Road. Vehicles, bicycles and pedestrians all share the roadway from Shell Road to the end of road at the Horse Hill multiuse path to Corte Madera. With pedestrians walking in the roadway which is also heavliy used by cyclists, combined with the roadway's slope and sharp curve visibility is limited. The project will provide a continuous sidewalk for pedestrians between the multiuse path and the existing sidewalk that continues westward from Shell Road towards Edna Maguire School and the Mill Valley-Sausalito path.

4. Project Limits

750 character maximum length - the character count is in italics to the right of the input cell. If applicable, provide the names of each street, highway, or other facility with proposed improvements and the limits of the proposed improvements along each facility.

The project is located in unincorporated Mill Valley on the northeastern segment of Lomita Drive, from Shell Road to the multi-use pathway along Highway 101 at Horse Hill.

5. Describe how this project will support equity

Describe how this project will support equity by identifying any of the following populations which may benefit from the project: Low-Income populations, Minority populations, Seniors 75 Years and Over, Zero-Vehicle Households, Level of English Proficiency, Single Parent Households, People with a Disability, or Rent-Burdened Households (the map below contains data related to the aforementioned populations within selected census tracts)

https://opendata.mtc.ca.gov/datasets/28a03a46fe9c4df0a29746d6f8c633c8_0?geometry=-130.715%2C37.123%2C-114.026%2C38.640

The project will benefit children and persons who do not own a motor vehicle by improving a gap in one of two routes between Corte Madera and Mill Valley. The sidewalk will improve conditions for all pedestrians by providing a safe path of travel outside of the roadway. It is also of benefit to residents of Plaza Drive whose children attend Edna Maguire school by providing a safe walkway where they must currently walk in the roadway.

6. Additional project information

Provide additional information related to the project for consideration during review of this application.

The proposed project will help complete the Horse Hill connection from Mill Valley to Corte Madera at a lesser gradient than the other connection between the communities over Camino Alto.

7. Project maps

If available, provide a location map showing the location of the project in the region and an area specific map showing the project limits. Maps should be submitted electronically.

8. PSR

If available, provide a copy of the PSR or PSR Equivalent as part of a complete application package.

Project Cost/Schedule/Status Information

9. Project cost, schedule and status

Provide the requested information related to the project cost, schedule and status by phase. Use the spaces below for additional cost, schedule and status information.

Project Phase	Cost	Schedule		Status
	Phase Total $ x 1,000	Begin (Mo/Yr)	End (Mo/Yr)	% Phase Complete
Scoping/Conceptual Planning	$ 10	7/21	9/21	75%
Environmental/Prelim. Engineering (PA&ED)	$ 10	8/21	2/22	0%
PS&E (Final Design)	$ 50	7/21	11/21	20%
Right of Way	$ 8	8/21	11/21	0%
Utility Relocation/Protection				
Construction	$ 220	4/22	11/22	0%
Construction Engineering	$ 30	4/22	11/22	0%
Other (enter phase name here)				
Total Estimated Costs	**$ 328**			

10. Additional cost/schedule/status information

Provide additional information related to the project cost, schedule and/or status in the space provided below. Include a list of any unresolved issues that may significantly affect the project information in the table above.

There is a paving project and a drainage improvement project on Lomita Dr. The, PSE, construction and construction engineering costs assume that all of these connected projects will be combine through additive alternates and would be awarded on the basis of the base bid plus all alternates. If there is a requirement for this project to bid as a stand alone project, then the PSE, construction and construction engineering costs will increase. All other costs would remain the same either way.

Funding

11. Funds requested

Provide the amount of funds requested for this Call for Projects. Include the phase and fiscal year associated with the requested funds. Provide the requested amounts to the nearest thousand dollars.

Funds Requested (TDA or/and TFCA, or leave blank if no preference)	Phase	Fiscal Year (to be used)		Requested Amount
TDA	PS&E (Final Design)	21/22		$ 37,500
TDA	Construction Engineering	21/22		$ 30,000
TDA	Construction	21/22		$ 220,000
			Total Funds Requested	**$ 287,500**

12. Other funds programmed

Provide the requested information related to any project funding currently programmed for this project. Be as specific as possible when entering the fund source. Include the phase and fiscal year associated with the currently programmed funds. Provide the programmed amounts to the nearest thousand dollars.

Source (TFCA, TDA, Measure A, Local General Fund, etc.)	Phase	Fiscal Year	Status of Fund (Identify as secured or pending)	Programmed Amount
General Fund Road & Bridge	Scoping/Conceptual Planning	21/22	Secure	$ 10,000
General Fund Road & Bridge	Environmental/Prelim. Engineering (PA&ED)	21/22	Secure	$ 10,000
General Fund Road & Bridge	PS&E (Final Design)	21/22	Secure	$ 12,500
General Fund Road & Bridge	Right of Way	21/22	Secure	$ 8,000
			Existing Total Funds Programmed	**$ 40,500**

13. Additional current programming information

If applicable, provide additional information related to the funds currently programmed to the project in the space provided below. Include a list of factors or issues that may affect the availability of the programmed funds.

Contact Information

14. Project Contact

(Provide the requested information for the individual repsonsible for delivering the project and maintaining the project scope, cost and schedule.)

Contact Name:	Eric Miller
Contact Title:	Principal Civil Engineer
Contact Telephone:	415-473-6354
Contact Fax:	
Contact Email:	Emiller@marincounty.org

15. Project application completed by

(Provide the requested information for the individual who completed this application. If it is the same as the Project Contact information above, enter "same.")

Name:	Carey Lando
Title:	Senior Transportation Planner
Telephone:	415-473-5078
Fax:	
Email:	clando@marincounty.org

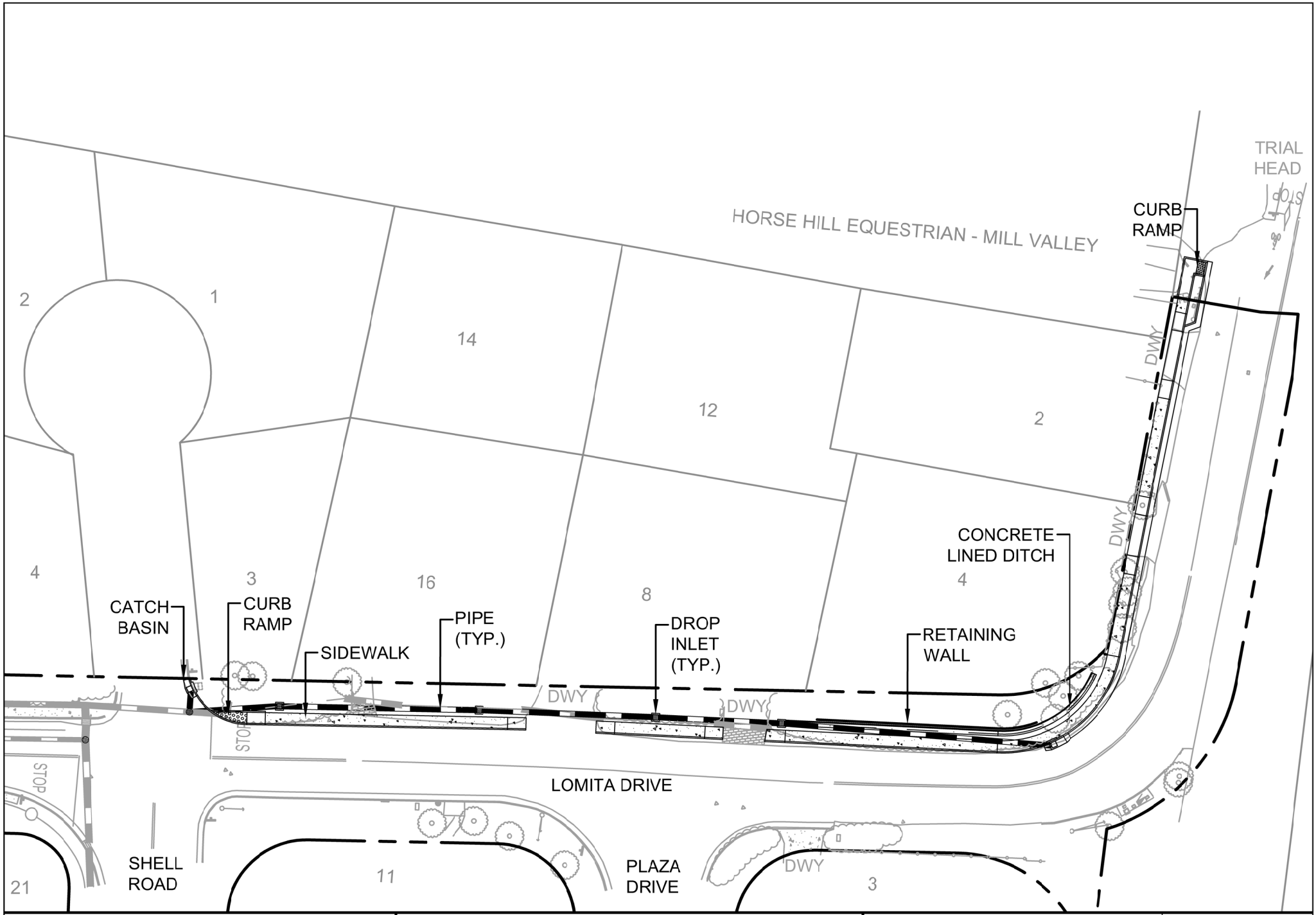

COUNTY OF MARIN DEPARTMENT OF PUBLIC WORKS 3501 CIVIC CENTER DRIVE, SAN RAFAEL, CA 94913	2021 LOMITA DRIVE REHABILITATION MULTI-MODAL IMPROVEMENTS SHELL ROAD TO END	SCALE: NTS 4/20/2021 DATE | -- DRAWN | -- CHECKED	COUNTY PROJECT NO. 2021-04 FEDERAL PROJECT NO. --

Project Information

1. Project Sponsor

Provide the name of the agency sponsoring the project.

City of Larkspur

2. Project Title

50 character maximum length - the character count is in italics to the right of the input cell

Doherty Drive Safe Pathways to Schools Phase II

3. Project Description

750 character maximum length - the character count is in italics to the right of the input cell

This project will complete the gap in pedestrian and bicycle improvements from the Riviera Circle/Redwood High School driveway to the Doherty Drive/Lucky Drive/Redwood High School driveway in the City of Larkspur. Project proposal includes: separated, ADA-accessible and paved mult-use pathway for pedestrians and bicyclists, improved connection to the multi-use trail to the east of Redwood High School, and removal of visual barriers adjacent to the project limits that reduce available sight distance.

4. Project Limits

750 character maximum length - the character count is in italics to the right of the input cell. If applicable, provide the names of each street, highway, or other facility with proposed improvements and the limits of the proposed improvements along each facility.

This proposed project will serve not only the general public, but greatly assist students that attend Hall Middle School, Tamiscal High School and Tamalpais Adult School to the west of the project limits and Redwood High School at the east end of the project limits, serving three school districts. The project limits reside solely within the City of Larkspur on Doherty Drive between Riviera Circle/Redwood High School west driveway and the west end of Doherty Drive where it intersects Lucky Drive/Redwood High School east driveway. There is one off-set T-intersection within the project limits where Riviera Circle intersects Doherty Drive.

5. Describe how this project will support equity

Describe how this project will support equity by identifying any of the following populations which may benefit from the project: Low-Income populations, Minority populations, Seniors 75 Years and Over, Zero-Vehicle Households, Level of English Proficiency, Single Parent Households, People with a Disability, or Rent-Burdened Households (the map below contains data related to the aforementioned populations within selected census tracts)

https://opendata.mtc.ca.gov/datasets/28a03a46fe9c4df0a29746d6f8c633c8_0?geometry=-130.715%2C37.123%2C-114.026%2C38.640

Within the project area tract (Source: MTC's Plan Bay Area 2050) in the vicinity of the City of Larkspur's proposed project, the following is a breakdown of the 6,126 people residing within this tract: 21.5% people of color, 1.3% people with limited English proficiency, 13.4% people with low income, 9.9% people with disabilities, 8.1% people burdened with rent, 11.7% households with zero vehicles, and 10.3% people over the age of 75. In addition, within the vicinity of our project and within this tract, there are two affordable housing sites with 87 total units. Our proposed project will serve this community tract by adding a wider multi-use pedestrian and bicycle pathway to facilitate the safe travel within the corridor. The new fully ADA-accessible pathway will accommodate safe ingress and egress, especially for people with disabilities and persons over the age of 75.

6. Additional project information

Provide additional information related to the project for consideration during review of this application.

The City completed the first phase of this project, which is in use today. This second phase of work will close the gap in the pathway and complete the corridor improvements providing a great benefit to pedestrians and bicycle users. The bidding documents (Plans, Specifications and Estimate) for this phase 2 project are complete, and this project is considered shovel-ready.

7. Project maps

If available, provide a location map showing the location of the project in the region and an area specific map showing the project limits. Maps should be submitted electronically.

8. PSR

If available, provide a copy of the PSR or PSR Equivalent as part of a complete application package.

Project Cost/Schedule/Status Information

9. Project cost, schedule and status

Provide the requested information related to the project cost, schedule and status by phase. Use the spaces below for additional cost, schedule and status information.

Project Phase	Cost	Schedule		Status
	Phase Total $ x 1,000	Begin (Mo/Yr)	End (Mo/Yr)	% Phase Complete
Scoping/Conceptual Planning				100%
Environmental/Prelim. Engineering (PA&ED)				100%
PS&E (Final Design)				100%
Right of Way				100%
Utility Relocation/Protection				100%
Construction	$455,000	06/2022	08/2022	0%
Construction Engineering	$45,000	06/2022	08/2022	0%
Other (enter phase name here)				
Total Estimated Costs	**$ 500,000**			

10. Additional cost/schedule/status information

Provide additional information related to the project cost, schedule and/or status in the space provided below. Include a list of any unresolved issues that may significantly affect the project information in the table above.

the project development phase has been completed and project is ready for bid advertisement and construction pending funding approval.

Funding

11. Funds requested

Provide the amount of funds requested for this Call for Projects. Include the phase and fiscal year associated with the requested funds. Provide the requested amounts to the nearest thousand dollars.

Funds Requested (TDA or/and TFCA, or leave blank if no preference)	Phase	Fiscal Year (to be used)		Requested Amount
$455,000 TFCA	Construction	2022/2023		$455,000.00
$45,000 TFCA	CM	2022/2023		$45,000.00
			Total Funds Requested	$ 500,000

12. Other funds programmed

Provide the requested information related to any project funding currently programmed for this project. Be as specific as possible when entering the fund source. Include the phase and fiscal year associated with the currently programmed funds. Provide the programmed amounts to the nearest thousand dollars.

Source (TFCA, TDA, Measure A, Local General Fund, etc.)	Phase	Fiscal Year	Status of Fund (Identify as secured or pending)	Programmed Amount
			Existing Total Funds Programmed	$ -

13. Additional current programming information

If applicable, provide additional information related to the funds currently programmed to the project in the space provided below. Include a list of factors or issues that may affect the availability of the programmed funds.

Contact Information

14. Project Contact

(Provide the requested information for the individual repsonsible for delivering the project and maintaining the project scope, cost and schedule.)

Contact Name:	Julian Skinner
Contact Title:	City Engineer/Public Works Director
Contact Telephone:	(415) 927-5017
Contact Fax:	
Contact Email:	jskinner@cityoflarkspur.org

15. Project application completed by

(Provide the requested information for the individual who completed this application. If it is the same as the Project Contact information above, enter "same.")

Name:	Rich Cho
Title:	Senior Engineer
Telephone:	(415) 496-2682
Fax:	
Email:	rcho@cityoflarkspur.org

CITY OF LARKSPUR
DOHERTY DRIVE
SAFE PATHWAYS TO SCHOOL PROJECT

LEGEND

SYMBOL	DESCRIPTION
——— – – ———	RIGHT OF WAY LINE
——— SD ———	STORM DRAIN LINE
◯	MAN HOLE
——— W ———	WATER LINE
○———○	WATER BACK FLOW PREVENTER
⋈ WV	WATER VALVE
——●——	SIGN
X / Y–Z	DETAIL REFERENCE NUMBER / DETAIL REFERENCE DRAWING

ABBREVIATIONS

AB	AGGREGATE BASE	OFF	OFFSET
AC	ASPHALT CONCRETE	PCC	POINT OF COMPOUND CURVE
APPROX	APPROXIMATE	PRC	POINT OF REVERSE CURVE
BC	BEGIN HORIZONTAL CURVE	PSI	POUNDS PER SQUARE INCH
BOC	BACK OF CURB	R	RADIUS
Beg	BEGIN	R&R	REMOVE AND REPLACE
BOW	BACK OF WALK	RC	RELATIVE COMPACTION
C&G	CURB AND GUTTER	RD	ROAD
CB	CATCH BASIN	Reinf	REINFORCEMENT
CONC.	CONCRETE	Ret	RETAINING
EC	END HORIZONTAL CURVE	ROW / R/W	RIGHT OF WAY
Elev	ELEVATION	RRFB	RECTANGULAR RAPID FLASHING BEACON
EP	EDGE OF PAVEMENT		
Exist/(E)	EXISTING	Rt	RIGHT OF STATION LINE
FL	FLOW LINE	SD	STORM DRAIN
FOC	FACE OF CURB	Shld	SHOULDER
FT	FOOT/FEET	SS	SANITARY SEWER
GB	GRADE BREAK	STA	STATION
HMA	HOT MIX ASPHALT	STD	STANDARD
INV	INVERT	ST.	STREET
LF	LINEAR FEET	SW	SIDEWALK
Lt	LEFT OF STATION LINE	TC	TOP OF CURB
MAX	MAXIMUM	Tot	TOTAL
MH	MANHOLE	Typ	TYPICAL
MIN	MINIMUM	Var	VARIES
NTS	NOT TO SCALE	W	WATER
OD	OUTSIDE DIAMETER	WV	WATER VALVE
		W/	WITH

UNDERGROUND SERVICE ALERT

Two working days before you dig
TOLL FREE 1-800-227-2600
www.digalert.org

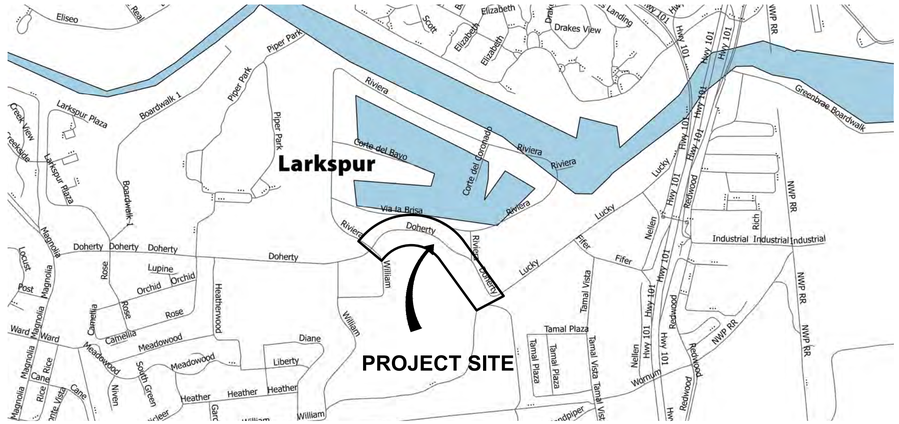

LOCATION MAP
NOT TO SCALE

VICINITY MAP
NOT TO SCALE

GENERAL NOTES

1. ALL WORK SHALL CONFORM TO THE CURRENTLY ADOPTED EDITIONS OF THE STANDARD PLANS AND SPECIFICATIONS, PROCEDURES MANUALS, AND ALL APPLICABLE REGULATIONS AND JURISDICTIONAL AGENCIES, UNLESS OTHERWISE NOTED.
2. CONTRACTOR WILL MAINTAIN ONE LANE OF TRAFFIC AT ALL TIMES EXCEPT FOR THE PERIODS SPECIFICALLY ALLOWED BY THE ENGINEER.
3. POST INFORMATION SIGNS WARNING OF POTENTIAL TRAFFIC DELAYS AT LEAST 48 HOURS PRIOR TO ANY LANE CLOSURE.
4. UTILITIES SHOWN ON THE PLAN ARE IN APPROXIMATE LOCATION. IT SHALL BE THE RESPONSIBILITY OF THE CONTRACTOR TO VERIFY UTILITY LOCATIONS AND OVERHEAD AND UNDERGROUND CLEARANCES WITH AFFECTED UTILITIES PRIOR TO START OF WORK.
5. CONTRACTOR AGREES TO ASSUME SOLE AND COMPLETE RESPONSIBILITY FOR JOB SITE CONDITIONS DURING THE COURSE OF CONSTRUCTION, INCLUDING SAFETY OF ALL PERSONS AND PROPERTY. THIS REQUIREMENT SHALL APPLY CONTINUOUSLY AND NOT BE LIMITED TO NORMAL WORKING HOURS. THE CONTRACTOR SHALL DEFEND, INDEMNIFY AND HOLD THE CITY AND ENGINEER HARMLESS FROM ANY AND ALL LIABILITY, REAL OR ALLEGED, IN CONNECTION WITH THE PERFORMANCE OF WORK ON THE PROJECT.
6. THE CONTRACTOR SHALL PROVIDE ALL LIGHTS, SIGNS, BARRICADES, FLAGGERS, AND OTHER DEVICES NECESSARY TO PROVIDE FOR PUBLIC SAFETY AND WORKER SAFETY IN ACCORDANCE WITH CALTRANS AND CAL–OSHA SPECIFICATIONS. THE CONTRACTOR SHALL SUBMIT TRAFFIC CONTROL PLAN FOR APPROVAL PRIOR TO START OF CONSTRUCTION.
7. IF ANY CULTURAL FEATURES OR ARCHAEOLOGICAL MATERIALS ARE UNCOVERED DURING EXCAVATION WORK, ALL WORK WITHIN ONE HUNDRED FEET OF THESE MATERIALS SHALL BE STOPPED UNTIL A PROFESSIONAL ARCHAEOLOGIST CERTIFIED BY THE SOCIETY OF PROFESSIONAL ARCHAEOLOGY OR SOCIETY OF CALIFORNIA ARCHAEOLOGY TO RECOMMEND APPROPRIATE MITIGATION MEASURES.
9. THE CONTRACTOR SHALL ADHERE TO THE CONSTRUCTION BEST MANAGEMENT PRACTICES (BMP) ISSUED BY MARIN COUNTY STORMWATER POLLUTION PREVENTION PROGRAM.
10. THE CONTRACTOR SHALL BE HELD RESPONSIBLE FOR ANY FIELD CHANGES MADE WITHOUT WRITTEN AUTHORIZATION FROM THE CITY ENGINEER.
11. THE CONTRACTOR IS RESPONSIBLE FOR MATCHING EXISTING STREETS, SURROUNDING LANDSCAPE, AND ALL OTHER EXISTING CONDITIONS WITH A SMOOTH TRANSITION IN PAVING, CURBS, GUTTERS, GRADING, STRIPING, ETC. AND TO AVOID ANY ABRUPT OR APPARENT CHANGES IN GRADES OR CROSS SLOPES, LOW SPOTS, TRAFFIC CONTROLS AND HAZARDOUS CONDITIONS,
12. THE CONTRACTOR IS RESPONSIBLE TO REPAIR ANY IRRIGATION LINES OR HEADS DAMAGE DURING CONSTRUCTION AND SHALL REPAIR THE IRRIGATION SYSTEM BACK TO WORKING ORDER.
13. THE ENGINEER ASSUMES NO RESPONSIBILITY BEYOND ADEQUACY OF THE DESIGN CONTAINED HEREIN.

APPLICABLE CALTRANS REVISED STDS, DATED 2018

A20A	–	A20D	PAVEMENT MARKERS AND TRAFFIC LINES
A24A	–	A24F	PAVEMENT MARKINGS
A88A	–	A88B	CURB RAMP AND PASSAGEWAY DETAILS
T13	–	T13	TRAFFIC CONTROL SYSTEM FOR LANE CLOSURE

APPLICABLE MARIN COUNTY STDS, DATED MAY 2008

105	–	CURB, GUTTER AND SIDEWALK DETAILS
265	–	GRATED DROP INLET AND TURNING STRUCTURE
330	–	TRENCH DETAILS

INDEX OF SHEETS

SHEET	DRAWING	DESCRIPTION
1	T–1	TITLE SHEET
2	S–1	SURVEY CONTROL AND DEMOLITION
3	X–1	CROSS SECTIONS
4	L–1	LAYOUT PLAN
5	L–2	LAYOUT PLAN
6	L–3	LAYOUT PLAN
7	PD–1	PAVEMENT DELINEATION AND SIGNS
8	PD–2	PAVEMENT DELINEATION AND SIGNS
9	PD–3	PAVEMENT DELINEATION AND SIGNS
10	D–1	DETAILS
11	D–2	DETAILS
12	D–3	IRRIGATION DETAILS

CITY OF LARKSPUR

PUBLIC WORKS DIRECTOR DATE

Parisi TRANSPORTATION CONSULTING
1750 Bridgeway, Suite B208
Sausalito, CA 94965
(415) 649-6000

DRAWN: AT | CHECKED: AL
DESIGNED: PAH | APPROVED: DP

REGISTERED PROFESSIONAL ENGINEER
DAVID J. PARISI
No. 46893
EXP. 03/22
CIVIL
STATE OF CALIFORNIA

TAM Transportation Authority of Marin

CITY OF LARKSPUR
DOHERTY DRIVE SAFE PATHWAYS TO SCHOOL PROJECT
TITLE SHEET

CITY OF LARKSPUR SUSTAINABLE CALIFORNIA

REVISIONS	
5	
4	
3	
2	
1	REVISED BASED ON PHASE 1 CONSTRUCTED IN 2020.
NO.	DESCRIPTION

DATE 04/16/2021 | SCALE NO SCALE
PTC PROJECT NO. 15035
DRAWING T-1
SHEET NO. 1 OF 12

LEGEND

- ROADWAY EXCAVATION
- REMOVE CONCRETE
- REMOVE TREE

SURVEY CONTROL POINT

NORTHING	EASTING	ELEVATION	DESCRIPTION	STATION/OFFSET
9604.8100	10962.11.50	5.6660	SET CP 60D	14+51.56, 57.412 Rt

NOTES

1. RIGHT OF WAY AND PROPERTY INFORMATION SHOWN ON PLANS IS FOR INFORMATION ONLY. FOR ACCURATE AND COMPLETE RIGHT OF WAY, REFER TO COUNTY RECORDS.
2. ALL EXISTING STRIPING AND PAVEMENT MARKERS ON DOHERTY DRIVE FROM RIVIERA CIRCLE WEST TO LUCKY DRIVE SHALL BE REMOVED.
3. CONTRACTOR SHALL ADJUST ANY UTILITY BOXES, COVERS, OR MANHOLES AS NECESSARY.

BENCHMARK

THE HORIZONTAL COORDINATES ARE CCS 83, ZONE 3 VALUES IN FEET. THE HORIZONTAL DATUM IS NAD 83.
THE VERTICAL ELEVATIONS ARE IN FEET. VERTICAL DATUM IS NAVD88.

ROADWAY ALIGNMENT GEOMETRY

CURVE	RADIUS	LENGTH	DELTA	T
C1	38.45'	90.4800	16° 48' 25"	90.15'
C2	177.34'	102.83'	33° 13' 16"	101.39'
C3	752.31'	301.91'	22° 59' 35"	299.89'
C4	321.10'	159.92'	28° 32' 4"	158.27'
C5	382.17'	176.08'	26° 23' 53"	174.53'
C6	237.86'	175.49'	42° 16' 22"	171.54'

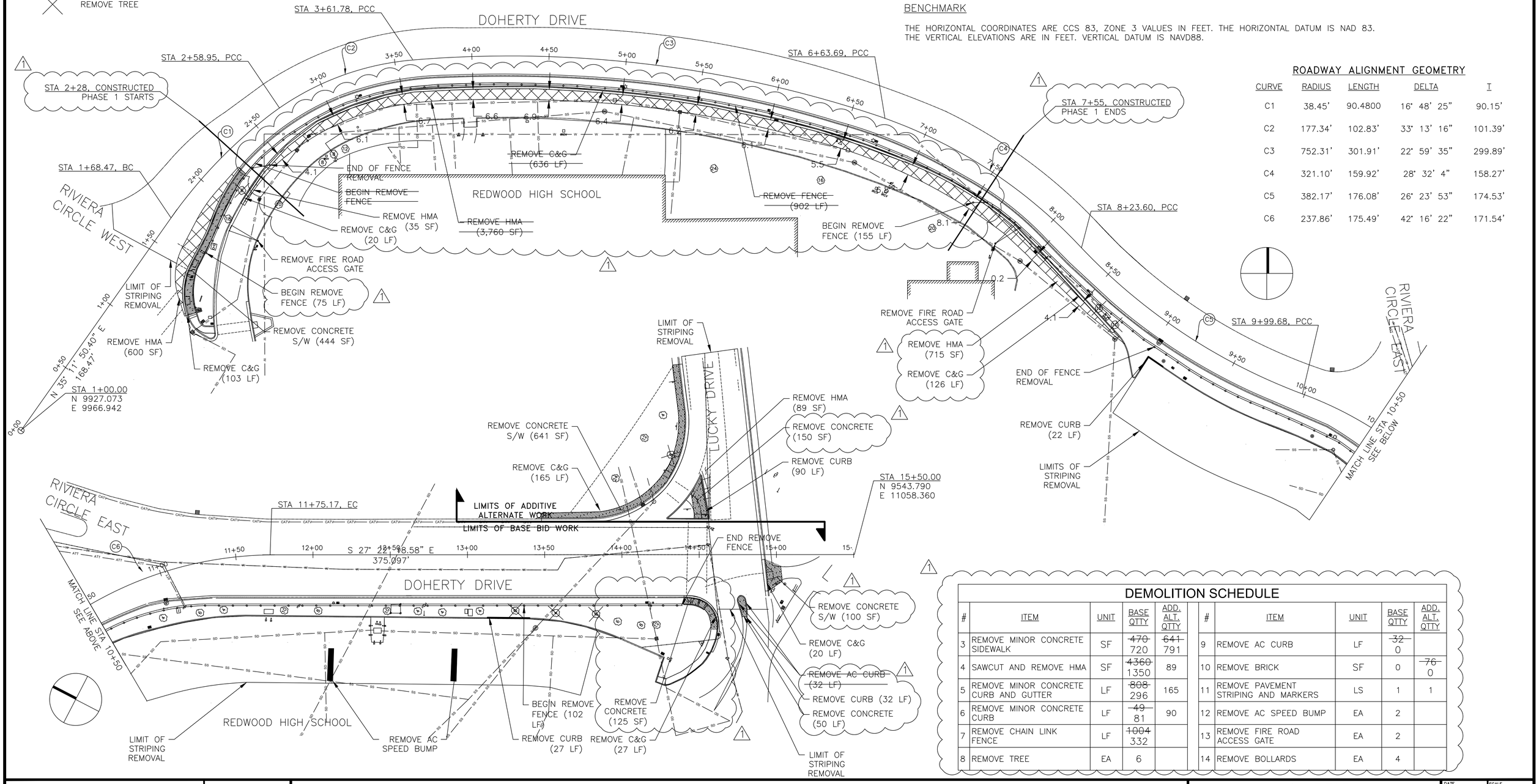

DEMOLITION SCHEDULE

#	ITEM	UNIT	BASE QTTY	ADD. ALT. QTTY	#	ITEM	UNIT	BASE QTTY	ADD. ALT. QTTY
3	REMOVE MINOR CONCRETE SIDEWALK	SF	~~470~~ 720	~~641~~ 791	9	REMOVE AC CURB	LF	~~32~~ 0	
4	SAWCUT AND REMOVE HMA	SF	~~4360~~ 1350	89	10	REMOVE BRICK	SF	0	~~76~~ 0
5	REMOVE MINOR CONCRETE CURB AND GUTTER	LF	~~808~~ 296	165	11	REMOVE PAVEMENT STRIPING AND MARKERS	LS	1	1
6	REMOVE MINOR CONCRETE CURB	LF	~~49~~ 81	90	12	REMOVE AC SPEED BUMP	EA	2	
7	REMOVE CHAIN LINK FENCE	LF	~~1004~~ 332		13	REMOVE FIRE ROAD ACCESS GATE	EA	2	
8	REMOVE TREE	EA	6		14	REMOVE BOLLARDS	EA	4	

Parisi TRANSPORTATION CONSULTING
1750 Bridgeway, Suite B208
Sausalito, CA 94965
(415) 649-6000

DRAWN:	CHECKED:
AT	AL
DESIGNED:	APPROVED:
PAH	DP

REGISTERED PROFESSIONAL ENGINEER DAVID J. PARISI No. 46893 EXP. 03/22 CIVIL STATE OF CALIFORNIA

TAM Transportation Authority of Marin

CITY OF LARKSPUR
DOHERTY DRIVE SAFE PATHWAYS TO SCHOOL PROJECT
SURVEY CONTROL AND DEMOLITION

CITY OF LARKSPURE CALIFORNIA

REVISIONS	
5	
4	
3	
2	
1	REVISED BASED ON PHASE 1 CONSTRUCTED IN 2020.
NO.	DESCRIPTION

DATE	SCALE
04/16/2021	1" = 30'

PTC PROJECT NO. 15035

DRAWING S-1

SHEET NO. 2 OF 12

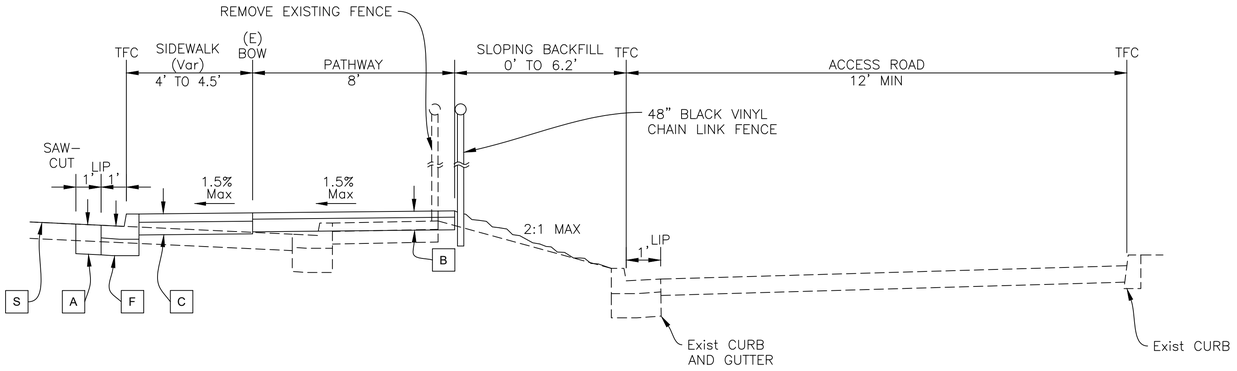

STA 1+71.91 to 2+05.88 (ACCESS ROAD)

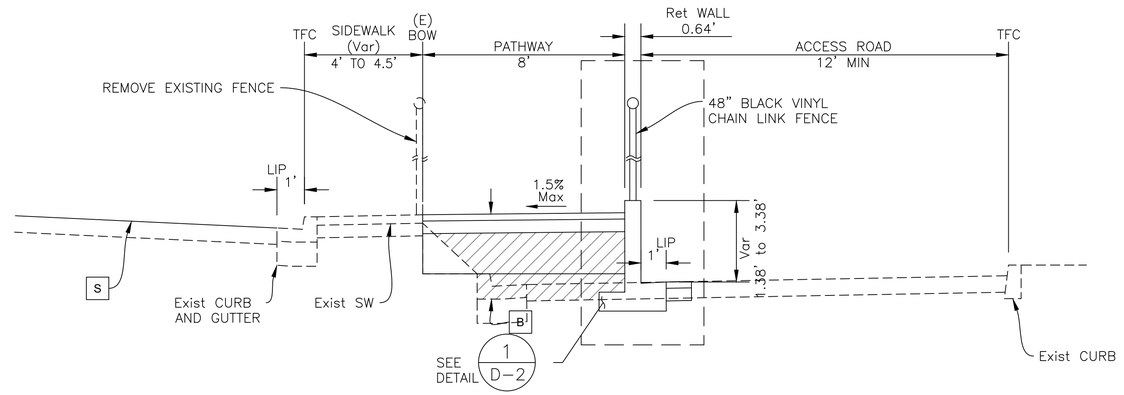

STA 2+05.88 to 8+76.53 (ACCESS ROAD)

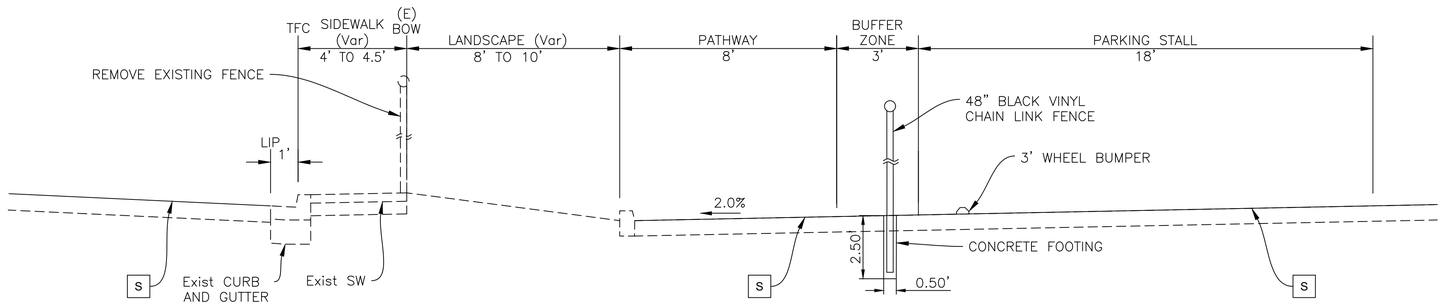

STA 9+01.75 TO 14+35.19 (PARKING LOT)

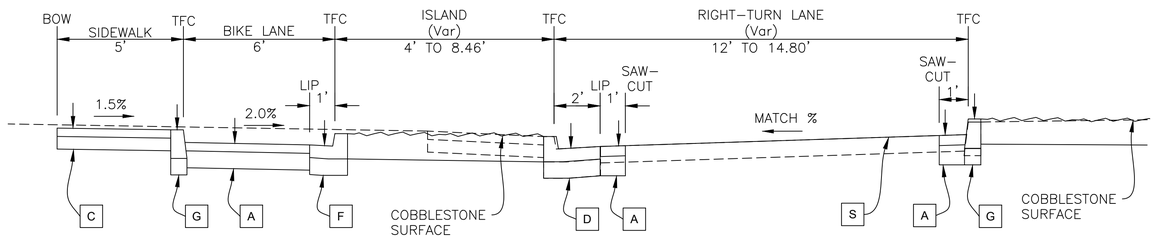

A-A NORTH CORNER OF DOHERTY DRIVE AND LUCKY DRIVE
(ALTERNATE BID ITEM)

TYPICAL STRUCTURAL SECTIONS

- A — 0.33' – HMA (TYPE A); 0.50' – CLASS 2 AB
- B — 0.25' – HMA (TYPE A); 0.50' – CLASS 2 AB; VAR (1–3') – STRUCTURE BACKFILL TO .75' BELOW FG
- C — 0.33' – MINOR CONCRETE (SIDEWALK); 0.50' – CLASS 2 AB
- D — 0.50' TYPE "A" C&G, SEE UCS DWG 105; 0.65' – CLASS 2 AB
- F — 0.50' TYPE "D" C&G, SEE UCS DWG 105; 0.65' – CLASS 2 AB
- G — 1.17' TYPE "E" CURB, SEE UCS DWG 105; 0.65' – CLASS 2 AB
- S — SLURRY SEAL

Parisi TRANSPORTATION CONSULTING
1750 Bridgeway, Suite B208
Sausalito, CA 94965
(415) 649-6000

DRAWN:	CHECKED:
AT	AL
DESIGNED:	APPROVED:
PAH	DP

REGISTERED PROFESSIONAL ENGINEER — DAVID J. PARISI — No. 47893 — Exp. 03/22 — CIVIL — STATE OF CALIFORNIA

TAM Transportation Authority of Marin

CITY OF LARKSPUR
DOHERTY DRIVE SAFE PATHWAYS TO SCHOOL PROJECT
TYPICAL SECTIONS

CITY OF LARKSPUR — CALIFORNIA

REVISIONS	
5	
4	
3	
2	
1	REVISED BASED ON PHASE 1 CONSTRUCTED IN 2020.
NO.	DESCRIPTION

DATE	SCALE
04/16/2021	NO SCALE
PTC PROJECT NO.	
15035	
DRAWING	
X-1	
SHEET NO.	
3 OF 12	

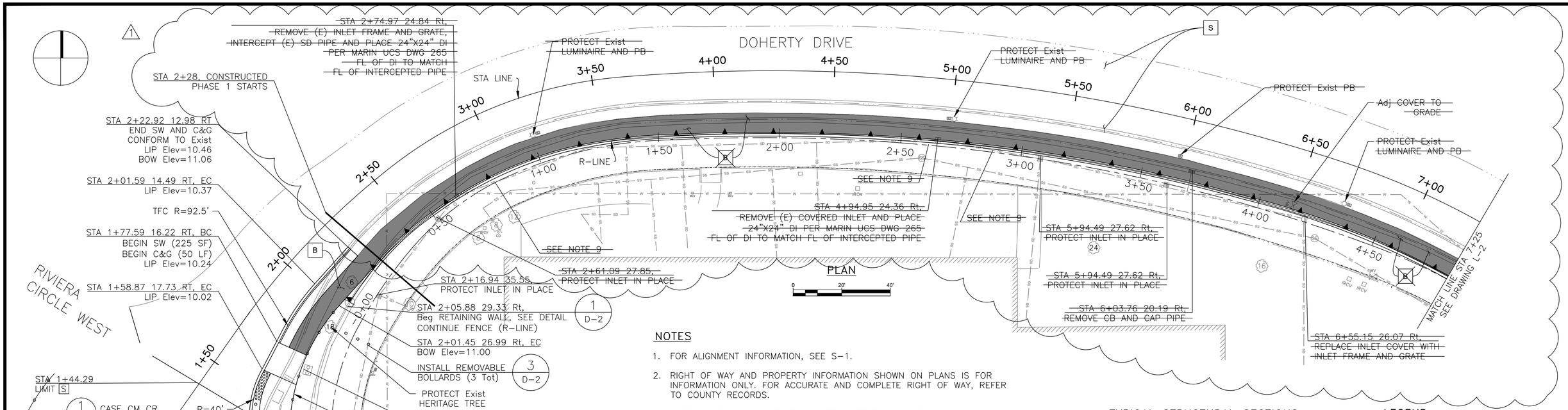

NOTES

1. FOR ALIGNMENT INFORMATION, SEE S-1.
2. RIGHT OF WAY AND PROPERTY INFORMATION SHOWN ON PLANS IS FOR INFORMATION ONLY. FOR ACCURATE AND COMPLETE RIGHT OF WAY, REFER TO COUNTY RECORDS.
3. CURB RAMPS AND SURFACE MOUNTED DETECTABLE WARNING SURFACES SHALL BE PER CALTRANS STANDARD PLAN A88A AND A88B.
4. SAWCUT SHALL BE A MINIMUM 1 FOOT FROM NEW LIP OF GUTTER OR NEW FLOW LINE OF CURB.
5. STATION AND OFFSET LISTED FOR INLETS AND UTILITIES REFER TO THE CENTER FACE OF THE GRATE, WALL, OR CONCRETE PAD NEAREST THE STATION LINE.
6. PRIOR TO SLURRY SEALING THE ROADWAY, THE CONTRACTOR SHALL REMOVE ALL EXISTING STRIPING WITHIN THE LIMITS OF WORK.
7. CONTRACTOR SHALL REPAIR ANY IRRIGATION LINES, LATERALS, AND HEADS DAMAGED DURING CONSTRUCTION AND SHALL RETURN BACK TO WORKING ORDER.
8. CONTRACTOR SHALL PROVIDE 3" OF MULCH IN LANDCAPE AREAS NOTED ON THE PLAN. THE MULCH SHALL BE APPROVED BY CITY OF LARKSPUR.
9. REPLACE 20' MIN OF SD PIPE IN KIND TO NEAREST JOINT AND DEFLECT 5° MAX TO REDIRECT TO PROPOSED DI @ MATCHING SLOPE.

TYPICAL STRUCTURAL SECTIONS

B — 0.25'– HMA (TYPE A); 0.50'– CLASS 2 AB; VAR (1–3') – STRUCTURE BACKFILL

S — SLURRY SEAL

LEGEND

- GRADE BREAK
- SLURRY SEAL
- HMA (TYPE A)
- FENCE
- RETAINING WALL & FENCE
- PERMANENT EASEMENT
- TEMPORARY EASEMENT
- CONSTRUCTION EASEMENT
- BACKFLOW PREVENTER
- GATE VALVE

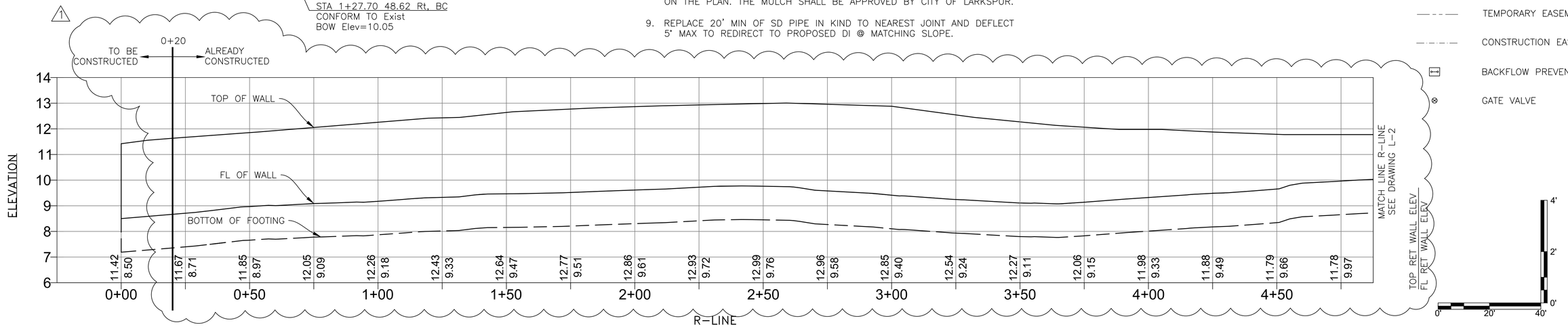

RETAINING WALL PROFILE

Parisi TRANSPORTATION CONSULTING
1750 Bridgeway, Suite B208
Sausalito, CA 94965
(415) 649-6000

DRAWN:	CHECKED:
AT	AL
DESIGNED:	APPROVED:
PAH	DP

REGISTERED PROFESSIONAL ENGINEER DAVID J. PARISI No. 47893 Exp. 03/22 CIVIL STATE OF CALIFORNIA

Transportation Authority of Marin

CITY OF LARKSPUR
DOHERTY DRIVE SAFE PATHWAYS TO SCHOOL PROJECT
LAYOUT PLAN - STA 0+75 - 7+25

CITY OF LARKSPUR CALIFORNIA

REVISIONS

NO.	DESCRIPTION
5	
4	
3	
2	
1	REVISED BASED ON PHASE 1 CONSTRUCTED IN 2020.

DATE	SCALE
04/16/2021	1" = 20'
PTC PROJECT NO.	
15035	
DRAWING	
L-1	
SHEET NO.	
4 OF 12	

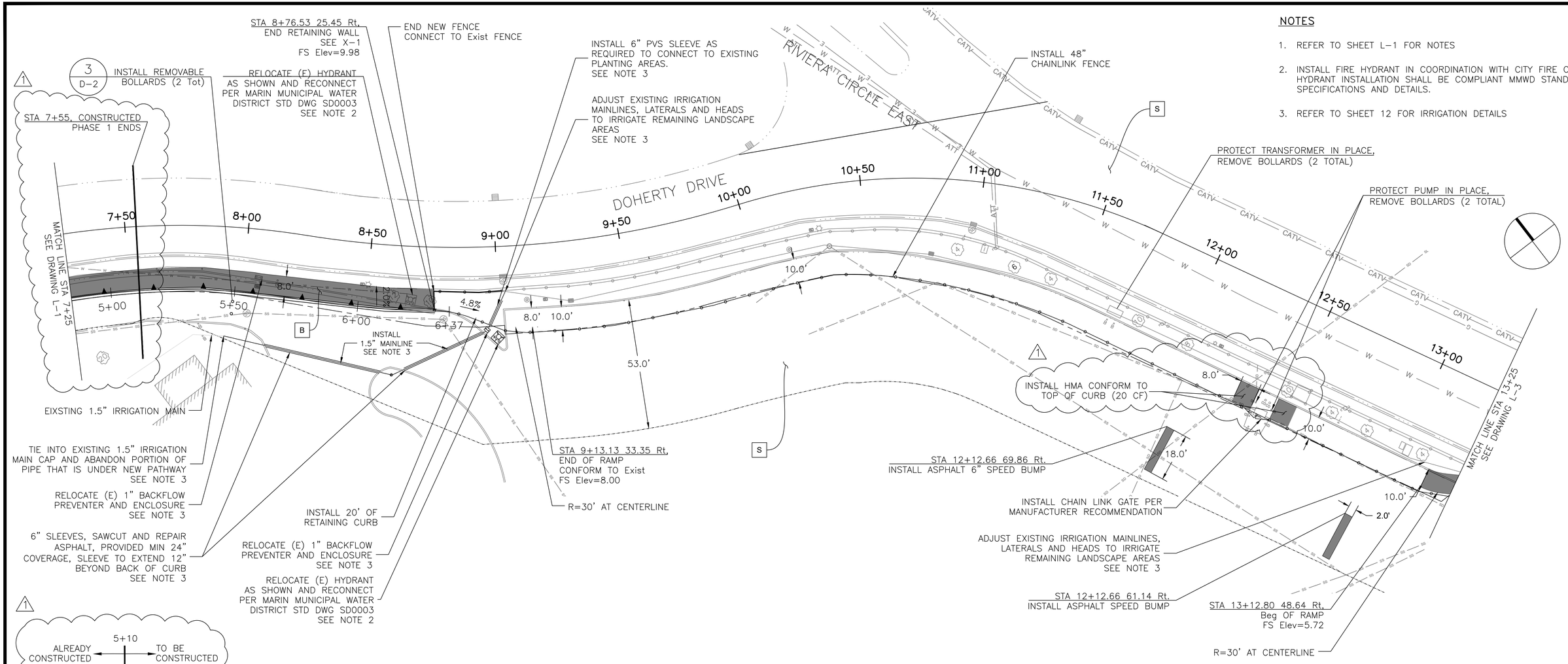

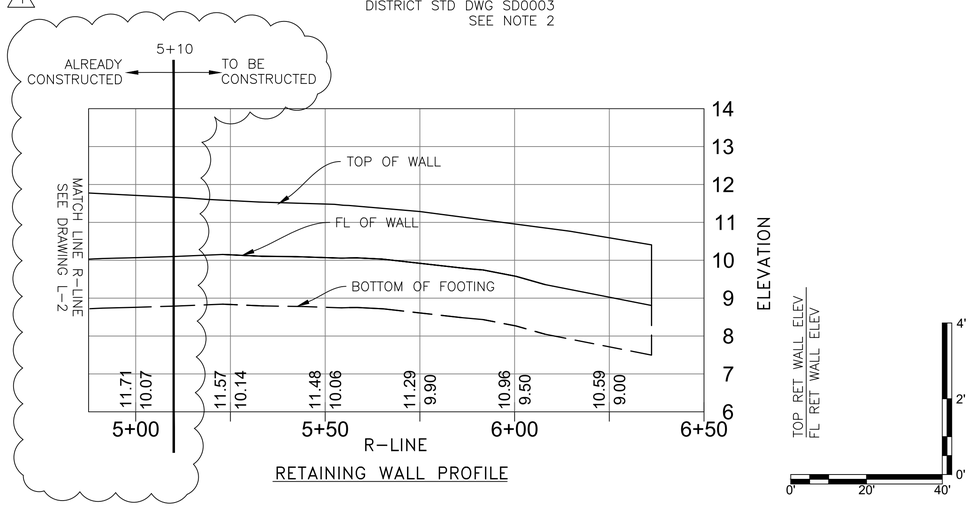

RETAINING WALL PROFILE

PLAN

0 20' 40'

TYPICAL STRUCTURAL SECTIONS

B
- 0.25'- HMA (TYPE A)
- 0.50'- CLASS 2 AB
- VAR 1-3' - STRUCTURE BACKFILL TO 0.75' BELOW FG

S
- SLURRY SEAL

NOTES

1. REFER TO SHEET L-1 FOR NOTES
2. INSTALL FIRE HYDRANT IN COORDINATION WITH CITY FIRE CHIEF. HYDRANT INSTALLATION SHALL BE COMPLIANT MMWD STANDARD SPECIFICATIONS AND DETAILS.
3. REFER TO SHEET 12 FOR IRRIGATION DETAILS

Parisi TRANSPORTATION CONSULTING
1750 Bridgeway, Suite B208
Sausalito, CA 94965
(415) 649-6000

DRAWN: AT | CHECKED: AL
DESIGNED: PAH | APPROVED: DP

REGISTERED PROFESSIONAL ENGINEER DAVID J. PARISI No. 43693 Exp. 03/22 CIVIL STATE OF CALIFORNIA

TAM Transportation Authority of Marin

CITY OF LARKSPUR
DOHERTY DRIVE SAFE PATHWAYS TO SCHOOL PROJECT
LAYOUT PLAN - STA 7+25 - 13+25

CITY OF LARKSPUR CALIFORNIA

REVISIONS	
5	
4	
3	
2	
1	REVISED BASED ON PHASE 1 CONSTRUCTED IN 2020.
NO.	DESCRIPTION

DATE: 04/16/2021 | SCALE: 1" = 20'
PTC PROJECT NO.: 15035
DRAWING: L-2
SHEET NO.: 5 OF 12

NOTES

1. REFER TO SHEET L-1 FOR NOTES
2. REFER TO SHEET 12 FOR IRRIGATION DETAILS

TYPICAL STRUCTURAL SECTIONS

A
- 0.33' – HMA (TYPE A)
- 0.50' – CLASS 2 AB

B
- 0.25' – HMA (TYPE A)
- 0.50' – CLASS 2 AB
- VAR (1–3') – STRUCTURE BACKFILL TO .75' BELOW FG

C
- 0.33' – MINOR CONCRETE (SIDEWALK)
- 0.50' – CLASS 2 AB

S
- SLURRY SEAL

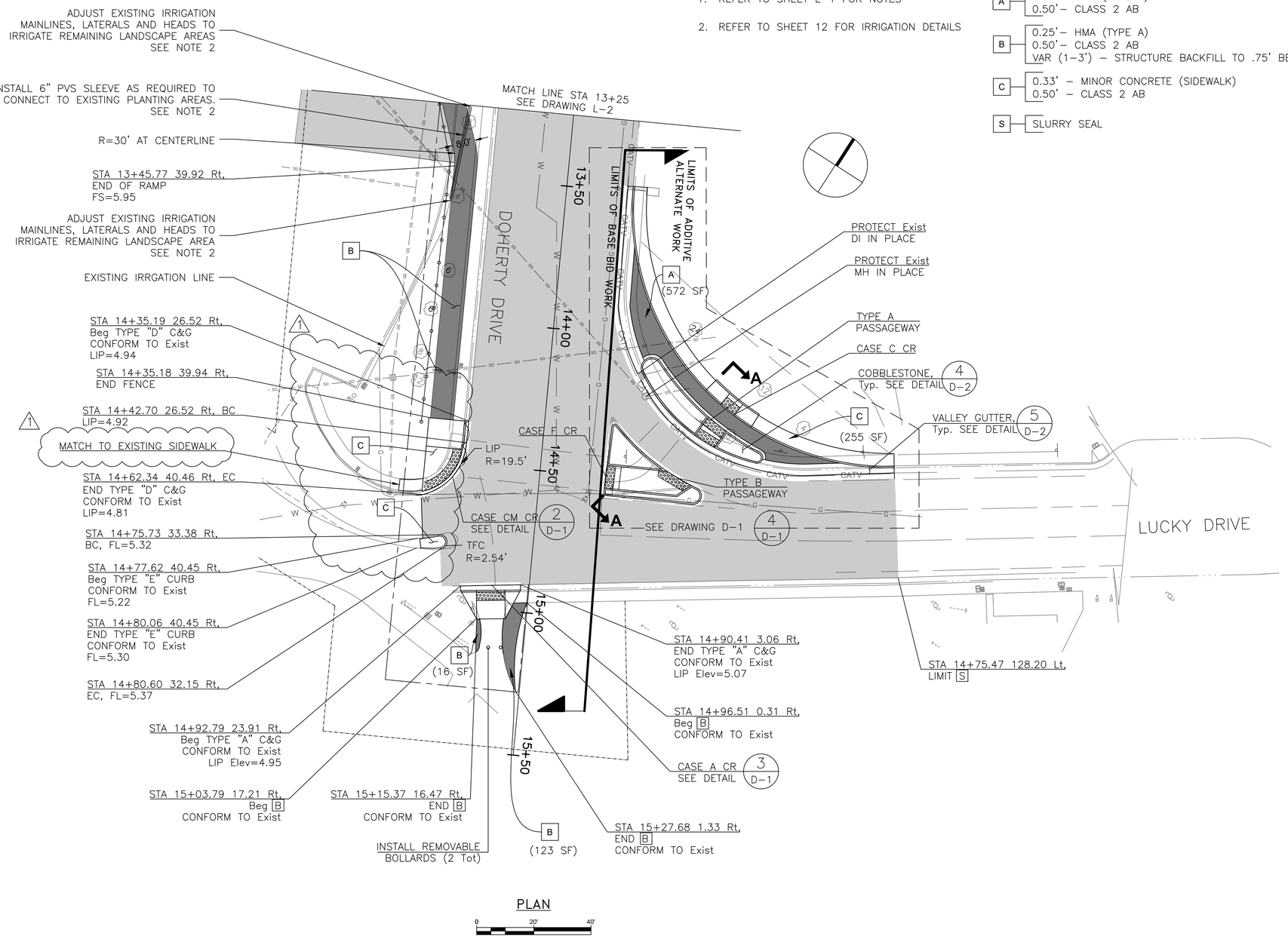

PLAN

0 20' 40'

1

CONSTRUCTION SCHEDULE

#	ITEM	UNIT	BASE QTTY	ADD. ALT. QTTY
16	24" x 24" DI	EA	~~2~~ 0	
17	8" RCP	LF	~~60~~ 0	
18	FIRE HYDRANT RELOCATION	LS	1	
19	ADJUST UTILITY BOX TO GRADE	LS	1	
20	MINOR CONCRETE (CURB AND GUTTER)	LF	50	156
21	MINOR CONCRETE (VALLEY GUTTER)	LF		80
22	MINOR CONCRETE (CURB)	LF	~~20~~ 41	215
23	MINOR CONCRETE (SIDEWALK)	CY	~~3~~ 4	7
24	CURB RAMP CASE CM (ALL–INCLUSIVE)	EA	2	
25	CURB RAMP CASE A (ALL–INCLUSIVE)	EA	1	
26	CURB RAMP CASE C (ALL–INCLUSIVE)	EA		1
27	CURB RAMP CASE F (ALL–INCLUSIVE)	EA		1
28	TYPE B PASSAGEWAY	EA		1
29	TYPE A PASSAGEWAY	EA		1
30	CONCRETE RETAINING WALL	SF	~~1815~~ 280	
31	STRUCTURE BACKFILL	CY	~~600~~ 150	
32	CLASS 2 AGGREGATE BASE	CY	~~110~~ 39	44
33	COBBLESTONE SURFACE	SF		273
34	HOT MIX ASPHALT (TYPE A)	TON	~~136~~ 65	14
35	SLURRY SEAL	TON	72	5
36	CHAIN LINK FENCE	LF	~~1100~~ 626	
37	REMOVABLE BOLLARDS	EA	10	

Parisi TRANSPORTATION CONSULTING
1750 Bridgeway, Suite B208
Sausalito, CA 94965
(415) 649-6000

DRAWN:	CHECKED:
AT	AL
DESIGNED:	APPROVED:
PAH	DP

REGISTERED PROFESSIONAL ENGINEER — DAVID J. PARISI — No. 46893 — Exp. 03/22 — CIVIL — STATE OF CALIFORNIA

Transportation Authority of Marin

CITY OF LARKSPUR
DOHERTY DRIVE SAFE PATHWAYS TO SCHOOL PROJECT
LAYOUT PLAN - STA 13+25 - 15+50

CITY OF LARKSPUR — INCORPORATED 1908 — CALIFORNIA

REVISIONS	
5	
4	
3	
2	
1	REVISED BASED ON PHASE 1 CONSTRUCTED IN 2020.
NO.	DESCRIPTION

DATE	SCALE
04/16/2021	1" = 20'

PTC PROJECT NO. 15035

DRAWING L-3

SHEET NO. 6 OF 12

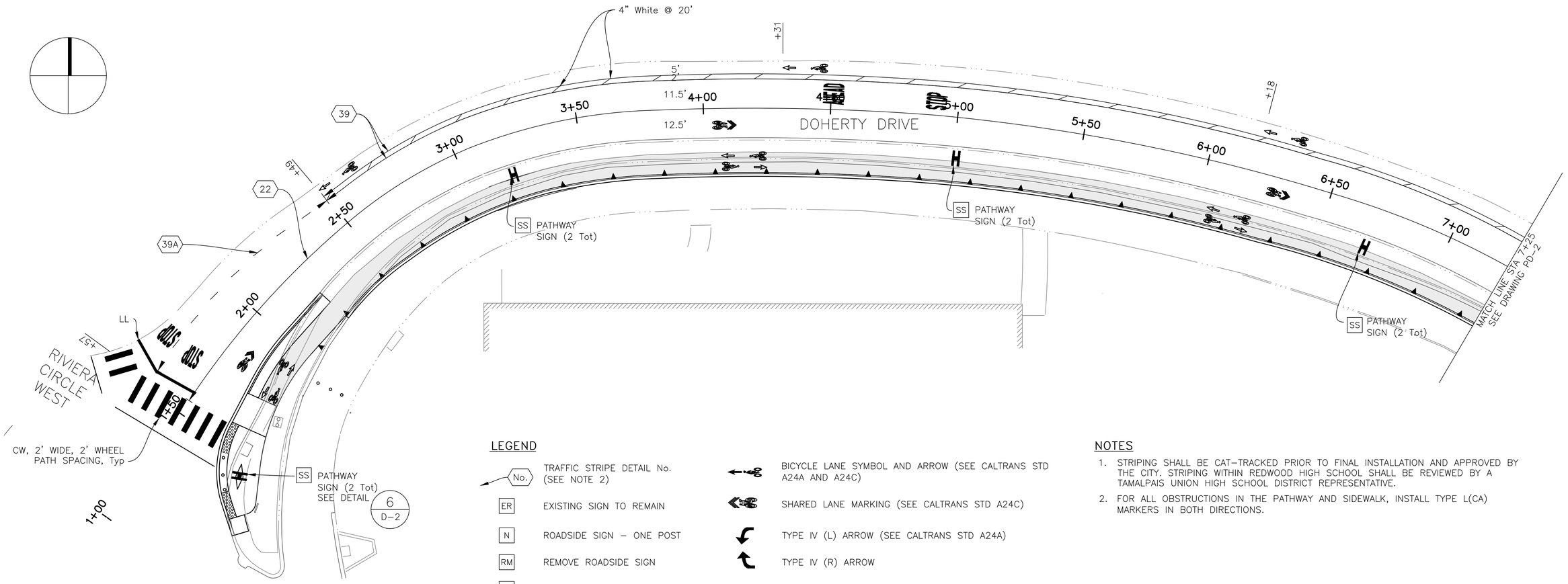

LEGEND

No.	TRAFFIC STRIPE DETAIL No. (SEE NOTE 2)
ER	EXISTING SIGN TO REMAIN
N	ROADSIDE SIGN – ONE POST
RM	REMOVE ROADSIDE SIGN
RS	RESET ROADSIDE SIGN
SS	INSTALL SIGN (STRAP AND SADDLE BRACKET METHOD)
Rel	RELOCATE ROADSIDE SIGN
	BICYCLE LANE SYMBOL AND ARROW (SEE CALTRANS STD A24A AND A24C)
	SHARED LANE MARKING (SEE CALTRANS STD A24C)
	TYPE IV (L) ARROW (SEE CALTRANS STD A24A)
	TYPE IV (R) ARROW
	LIMITS OF DESIGNATED STRIPES AND DETAILS
CW	CROSS WALK (SEE CALTRANS STD A24F CONTINENTAL)
LL	LIMIT LINE (12" WHITE)
	EXISTING SIGN
	PROPOSED SIGN
	OBSTRUCTION MARKING

NOTES

1. STRIPING SHALL BE CAT–TRACKED PRIOR TO FINAL INSTALLATION AND APPROVED BY THE CITY. STRIPING WITHIN REDWOOD HIGH SCHOOL SHALL BE REVIEWED BY A TAMALPAIS UNION HIGH SCHOOL DISTRICT REPRESENTATIVE.
2. FOR ALL OBSTRUCTIONS IN THE PATHWAY AND SIDEWALK, INSTALL TYPE L(CA) MARKERS IN BOTH DIRECTIONS.

Parisi TRANSPORTATION CONSULTING
1750 Bridgeway, Suite B208
Sausalito, CA 94965
(415) 649-6000

DRAWN: AT	CHECKED: AL
DESIGNED: PAH	APPROVED: DP

REGISTERED PROFESSIONAL ENGINEER DAVID J. PARISI No. 47883 EXP. 03/22 CIVIL STATE OF CALIFORNIA

TAM Transportation Authority of Marin

CITY OF LARKSPUR
DOHERTY DRIVE SAFE PATHWAYS TO SCHOOL PROJECT
PAVEMENT DELINEATION AND SIGN PLAN - STA 1+00 - 7+25

CITY OF LARKSPUR CALIFORNIA

REVISIONS	
5	
4	
3	
2	
1	REVISED BASED ON PHASE 1 CONSTRUCTED IN 2020.
NO.	DESCRIPTION

DATE: 04/16/2021	SCALE: 1" = 20'
PTC PROJECT NO.: 15035	
DRAWING: PD-1	
SHEET NO.: 7 OF 12	

NOTES

1. STRIPE PARKING STALLS PER DETAIL 2 ON SHEET 11
2. REMOVE THE EXISTING PAINT, INCLUDING THE DIAGONAL WHITE PAINT, WITHIN 24 FEET FROM THE END OF THE 16–FOOT 90 DEGREE PARKING STALLS. INSTALL A NEW WHITE STRIPE AT 24 FEET FROM THE BACK OF PARKING STALL.
3. STRIPING SHALL BE CAT–TRACKED PRIOR TO FINAL INSTALLATION AND APPROVED BY THE CITY. STRIPING WITHIN REDWOOD HIGH SCHOOL SHALL BE REVIEWED BY A TAMALPAIS UNION HIGH SCHOOL DISTRICT REPRESENTATIVE.

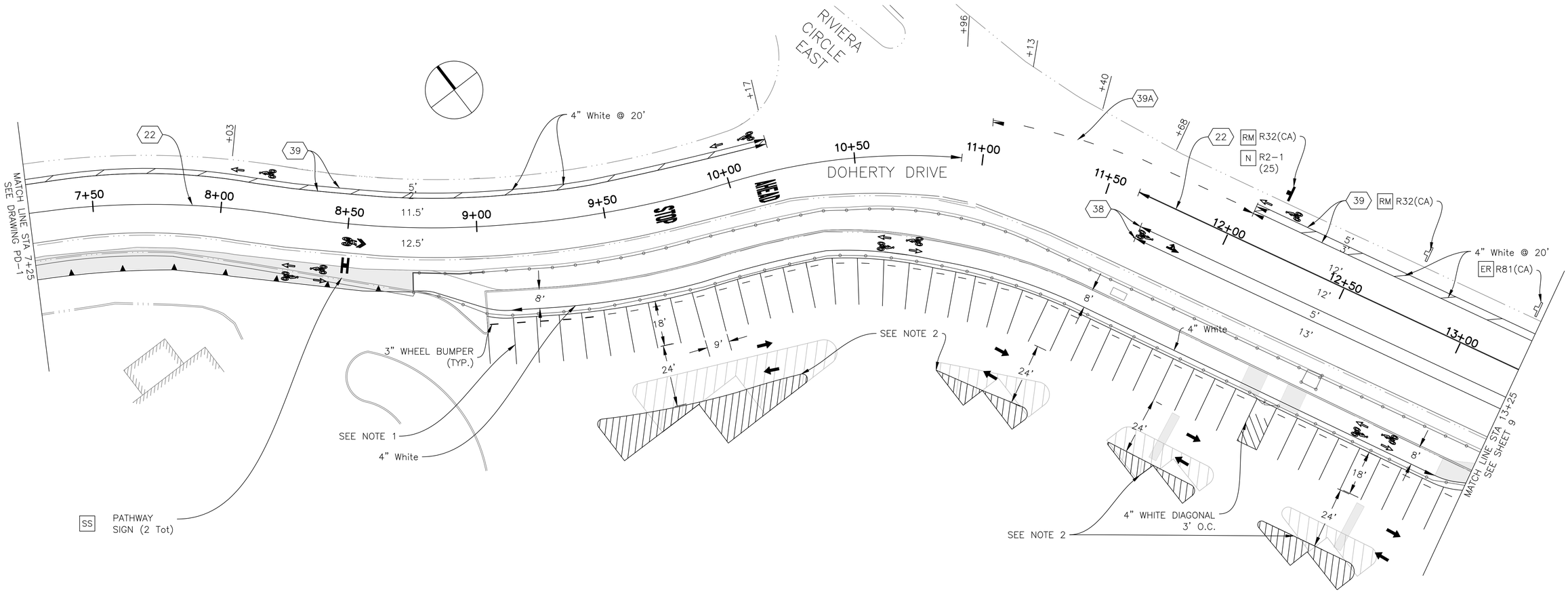

Parisi TRANSPORTATION CONSULTING
1750 Bridgeway, Suite B208
Sausalito, CA 94965
(415) 649-6000

DRAWN:	CHECKED:
AT	AL
DESIGNED:	APPROVED:
PAH	DP

REGISTERED PROFESSIONAL ENGINEER — DAVID J. PARISI — No. 46893 — Exp. 03/22 — CIVIL — STATE OF CALIFORNIA

TAM Transportation Authority of Marin

CITY OF LARKSPUR
DOHERTY DRIVE SAFE PATHWAYS TO SCHOOL PROJECT
PAVEMENT DELINEATION AND SIGN PLAN - STA 7+25 - 15+50

CITY OF LARKSPUR — PARKS, RECREATION & COMMUNITY SERVICES — CALIFORNIA

REVISIONS	
5	
4	
3	
2	
1	REVISED BASED ON PHASE 1 CONSTRUCTED IN 2020.
NO.	DESCRIPTION

DATE	SCALE
04/16/2021	1" = 20'
PTC PROJECT NO.	
15035	
DRAWING	
PD-2	
SHEET NO.	
8 OF 12	

NOTES

1. MODIFY R10-15 SIGN. REPLACE "TURNING VEHICLES" TO "RIGHT TURNS".
2. STRIPING SHALL BE CAT-TRACKED PRIOR TO FINAL INSTALLATION AND APPROVED BY THE CITY. STRIPING WITHIN REDWOOD HIGH SCHOOL SHALL BE REVIEWED BY A TAMALPAIS UNION HIGH SCHOOL DISTRICT REPRESENTATIVE.

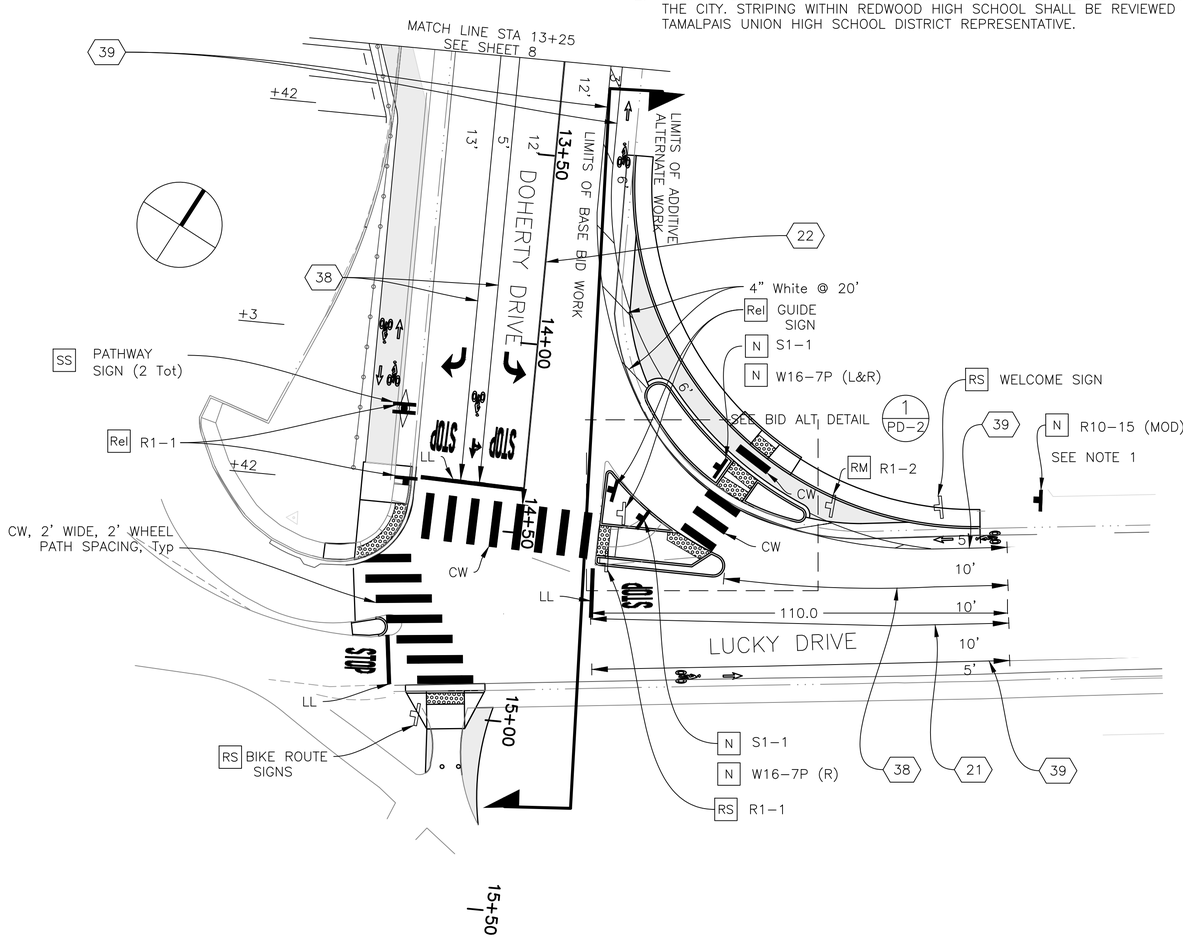

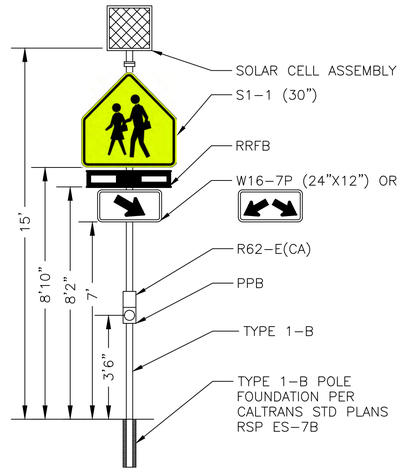

RRFB AND SIGN ASSEMBLY
NTS

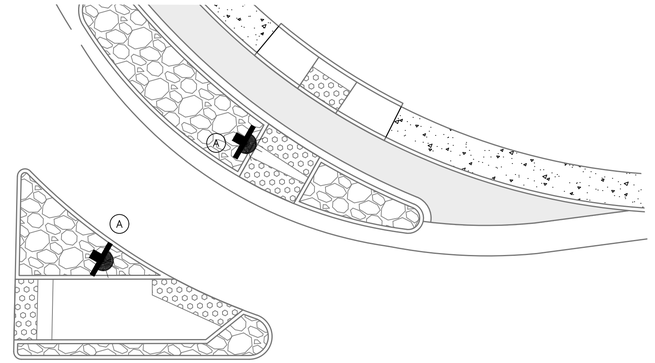

POLE	SIGNAGE	SPECIAL REQUIREMENTS
(A)	S1-1/ W16-7P/ R62-E (CA)	INSTALL SINGLE-SIDED RRFB SYSTEM WITH SOLAR POWER PANEL AND FIXTURES, WIRELESS TRANSMITTER AND PEDESTRIAN PUSH BUTTON AND SIGNS ON NEW TYPE 1-B POLE. INSTALL POLE OUTSIDE THE CURB RAMP FLARE AND GROOVES.

1 BID ALTERNATE
– RRFB DETAIL

STRIPING SCHEDULE

#	ITEM	UNIT	BASE QTTY	ADD. ALT. QTTY
38	THERMOPLASTIC CROSSWALK MARKING	SF	560	
39	THERMOPLASTIC STOP BAR	SF	65	10
40	THERMOPLASTIC STOP STENCIL	EA	7	1
41	THERMOPLASTIC AHEAD STENCIL	EA	2	
42	THERMOPLASTIC SHARROW STENCIL	EA	4	
43	THERMOPLASTIC BIKE LANE STENCIL	EA	23	2
44	THERMOPLASTIC TURN ARROWS STENCIL	EA	2	
45	DETAIL 21	LF		100
46	DETAIL 22	LF	1300	
47	DETAIL 38	LF	500	100
48	DETAIL 39	LF	1900	400
49	DETAIL 39A	LF	200	
50	4" WHITE HATCHING MARKINGS	LF	1900	
51	4" WHITE OBSTRUCTION MARKING	EA	5	

SIGNING SCHEDULE

#	ITEM	UNIT	BASE QTTY	ADD. ALT. QTTY
52	SIGNAGE – SUM OF 4 FOLLOWING ITEMS	LS	1	
	Reset and relocate sign	EA	5	
	Sign – one post	EA	6	
	Object markers	EA	18	
	Sign (strap and saddle)	EA	18	
53	ASPHALT SPEED BUMP	EA	2	
54	SOLAR RRFB – ALL INCLUSIVE (PPB, SIGN, BEACON)	EA		2
55	POLE (TYPE 1-B)	EA		2

Parisi TRANSPORTATION CONSULTING
1750 Bridgeway, Suite B208
Sausalito, CA 94965
(415) 649-6000

DRAWN:	CHECKED:
AT	AL
DESIGNED:	APPROVED:
PAH	DP

REGISTERED PROFESSIONAL ENGINEER — DAVID J. PARISI — No. 48693 — EXP. 03/22 — CIVIL — STATE OF CALIFORNIA

TAM Transportation Authority of Marin

CITY OF LARKSPUR
DOHERTY DRIVE SAFE PATHWAYS TO SCHOOL PROJECT
PAVEMENT DELINEATION AND SIGN PLAN - STA 13+25 - 15+50

CITY OF LARKSPUR CALIFORNIA

REVISIONS	
5	
4	
3	
2	
1	REVISED BASED ON PHASE 1 CONSTRUCTED IN 2020.
NO.	DESCRIPTION

DATE	SCALE
04/16/2021	1" = 20'
PTC PROJECT NO.	
15035	
DRAWING	
PD-3	
SHEET NO.	
9 OF 12	

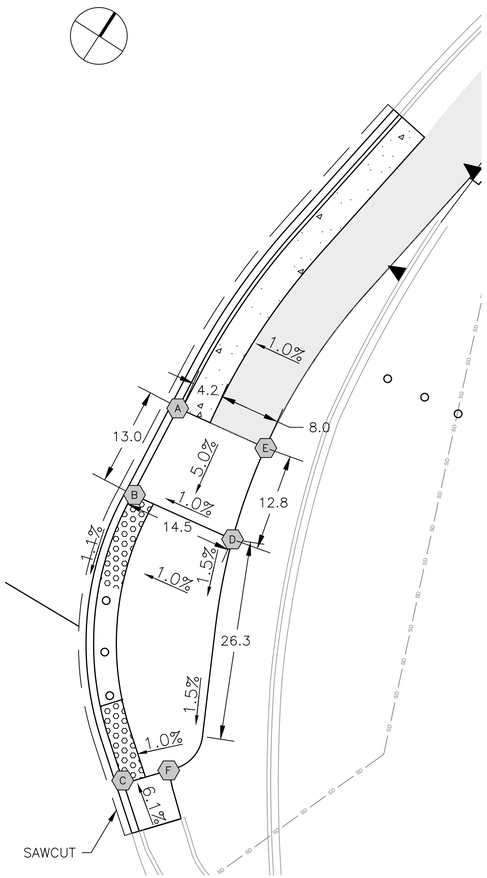

POINT	DESC	STA "A"	OFFSET	ELEV
A	TC	1+71.94	17.03 Rt	10.63
B	FL	1+58.98	18.74 Rt	10.02
C	FL	1+27.13	39.75 Rt	9.58
D	BW	1+61.74	32.90 Rt	10.11
E	BW	1+74.70	29.42 Rt	10.75
F	BW	1+31.97	43.59 Rt	9.63

1 – CURB RAMP CASE CM

0 10' 20'

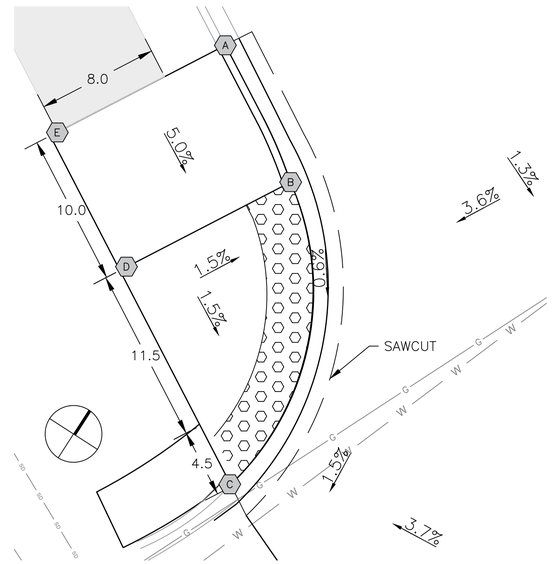

POINT	DESC	STA "A"	OFFSET	ELEV
A	TC	14+35.48	27.43 Rt	5.35
B	FL	14+45.19	26.73 Rt	4.87
C	FL	14+60.94	39.94 Rt	4.77
D	BW	14+45.19	39.94 Rt	4.98
E	BW	14+35.48	39.94 Rt	5.47

2 – CURB RAMP CASE CM

0 5' 10'

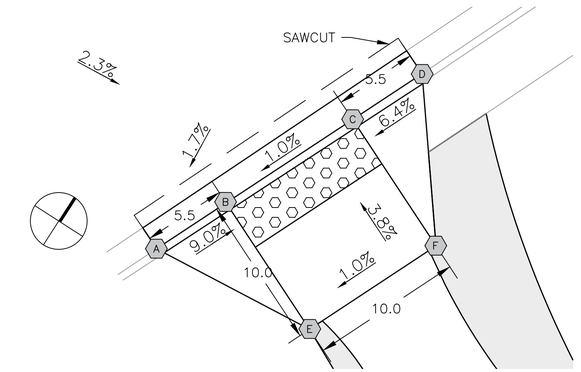

POINT	DESC	STA "A"	OFFSET	ELEV
A	TC	14+94.43	23.72 Rt	5.45
B	FL	14+93.86	18.26 Rt	4.82
C	FL	14+92.79	8.31 Rt	4.92
D	TC	14+92.23	2.85 Rt	5.4000
E	BW	15+03.79	17.21 Rt	5.30
F	BW	15+02.74	7.26 Rt	5.4000

3 – CURB RAMP CASE A

0 5' 10'

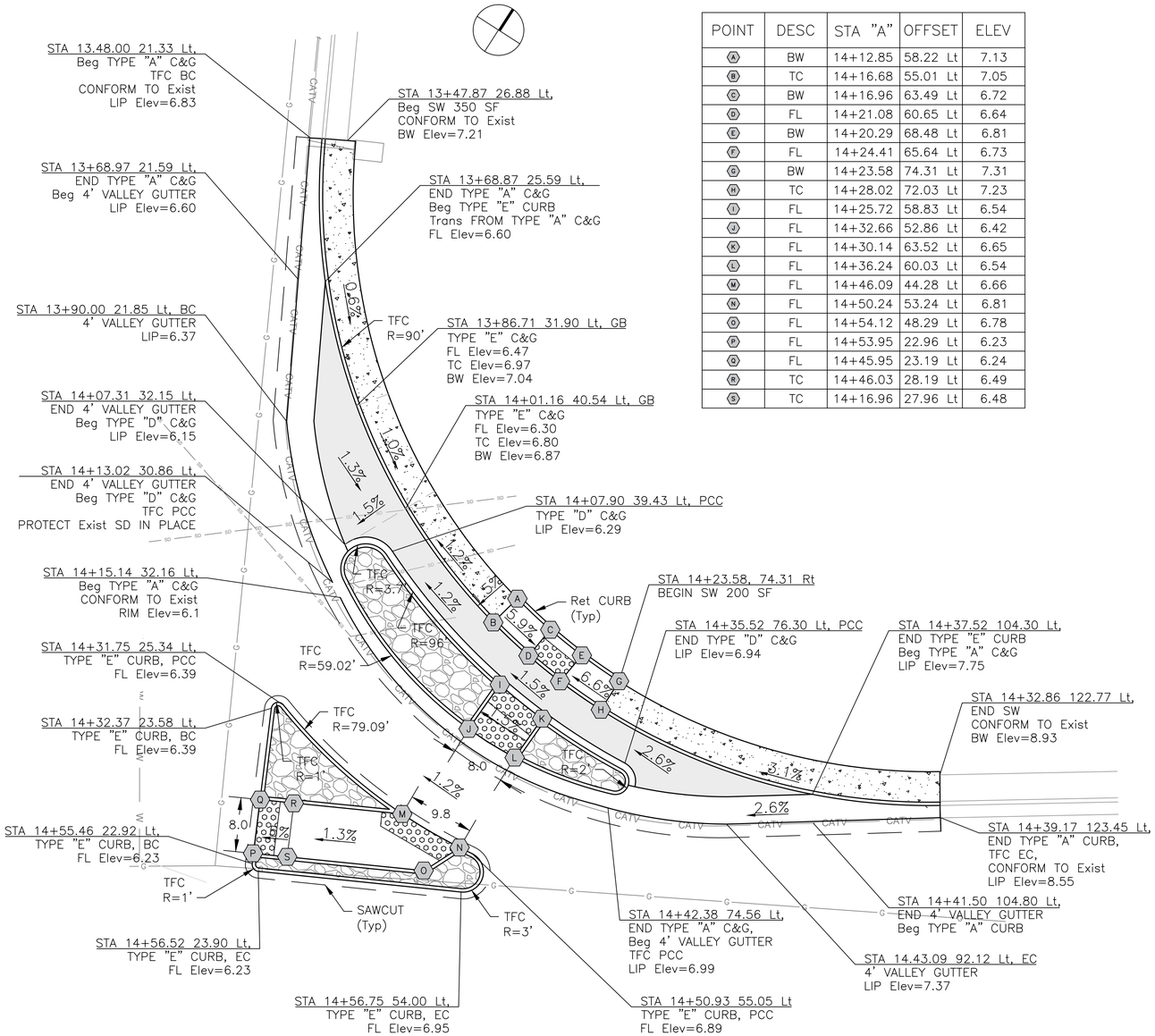

POINT	DESC	STA "A"	OFFSET	ELEV
A	BW	14+12.85	58.22 Lt	7.13
B	TC	14+16.68	55.01 Lt	7.05
C	BW	14+16.96	63.49 Lt	6.72
D	FL	14+21.08	60.65 Lt	6.64
E	BW	14+20.29	68.48 Lt	6.81
F	FL	14+24.41	65.64 Lt	6.73
G	BW	14+23.58	74.31 Lt	7.31
H	TC	14+28.02	72.03 Lt	7.23
I	FL	14+25.72	58.83 Lt	6.54
J	FL	14+32.66	52.86 Lt	6.42
K	FL	14+30.14	63.52 Lt	6.65
L	FL	14+36.24	60.03 Lt	6.54
M	FL	14+46.09	44.28 Lt	6.66
N	FL	14+50.24	53.24 Lt	6.81
O	FL	14+54.12	48.29 Lt	6.78
P	FL	14+53.95	22.96 Lt	6.23
Q	FL	14+45.95	23.19 Lt	6.24
R	TC	14+46.03	28.19 Lt	6.49
S	TC	14+16.96	27.96 Lt	6.48

4 – NORTH CORNER OF DOHERTY DRIVE AND LUCKY DRIVE (ALTERNATE BID ITEMS)

0 10' 20'

Parisi TRANSPORTATION CONSULTING
1750 Bridgeway, Suite B208
Sausalito, CA 94965
(415) 649-6000

DRAWN:	CHECKED:
AT	AL
DESIGNED:	APPROVED:
PAH	DP

REGISTERED PROFESSIONAL ENGINEER DAVID J. PARISI No. 47893 EXP. 03/22 CIVIL STATE OF CALIFORNIA

TAM Transportation Authority of Marin

CITY OF LARKSPUR
DOHERTY DRIVE SAFE PATHWAYS TO SCHOOL PROJECT
DETAILS

CITY OF LARKSPUR CALIFORNIA

REVISIONS	
5	
4	
3	
2	
1	REVISED BASED ON PHASE 1 CONSTRUCTED IN 2020.
NO.	DESCRIPTION

DATE	SCALE
04/16/2021	VARIES
PTC PROJECT NO.	
15035	
DRAWING	
D-1	
SHEET NO.	
10 OF 12	

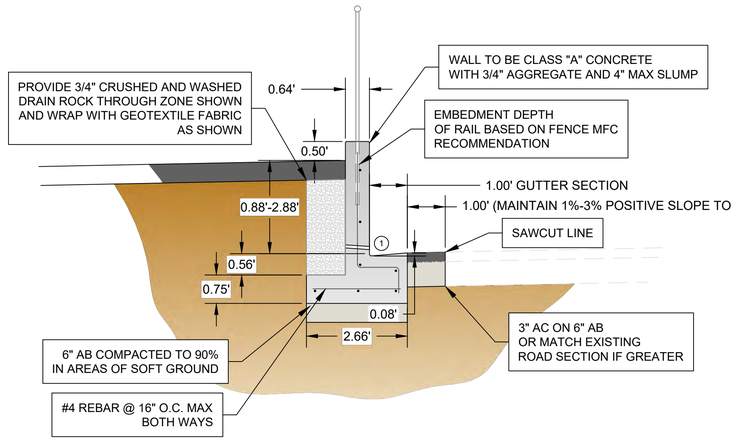

NOTES

1. PROVIDE 1"Ø WEEP HOLES 20' O.C.
2. OTHER THAN THE DETAILED INFORMATION ABOVE, THE RETAINING WALL SHALL BE BUILT PER THE MATERIALS AND SPECIFICATIONS IDENTIFIED ON THE MARIN COUNTY RETAINING WALL TYPE "A" DETAIL.

1 CONCRETE RETAINING WALL
SCALE: NTS

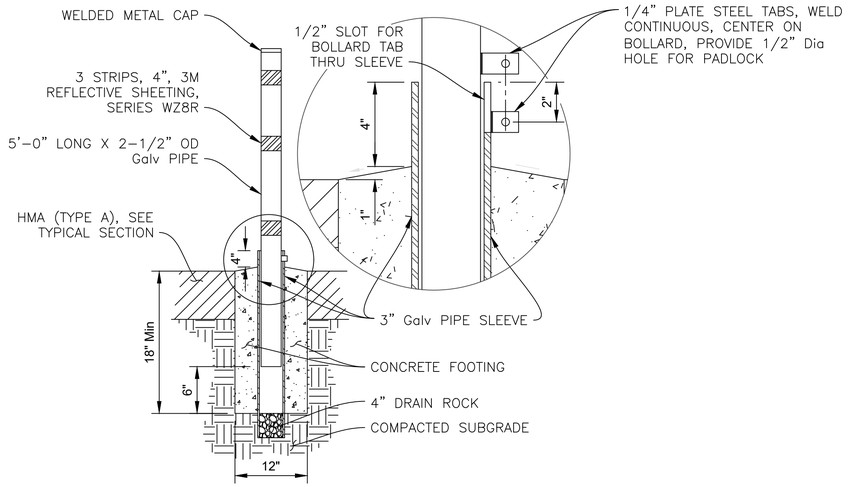

NOTES

BOLLARD FINISH TO BE POWDER COAT. COLOR TO BE REAL TEAL. SUBMIT SAMPLE OF COLOR TO ENGINEER FOR APPROVAL.

3 REMOVABLE BOLLARD
SCALE: NTS

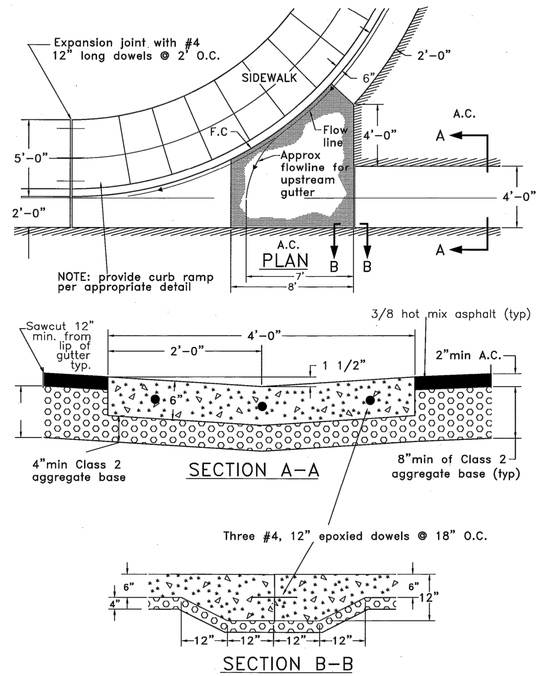

5 VALLEY GUTTER
SCALE: NTS

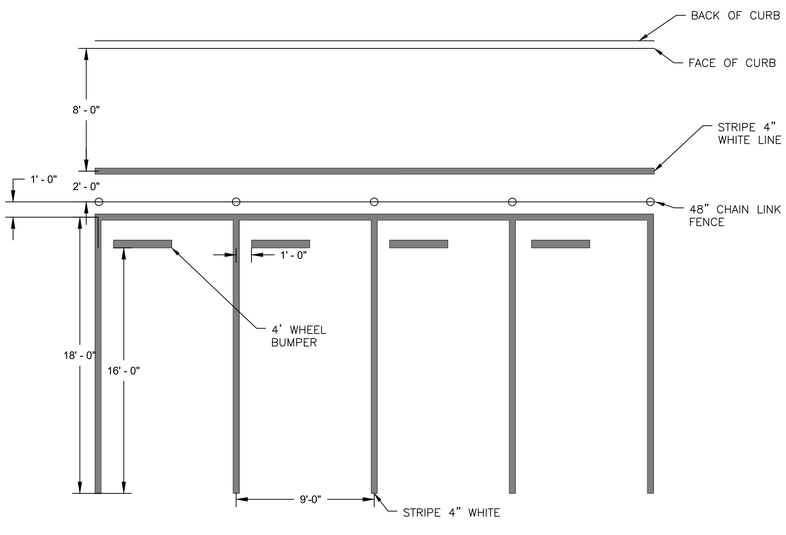

2 PARKING DETAIL
SCALE: NTS

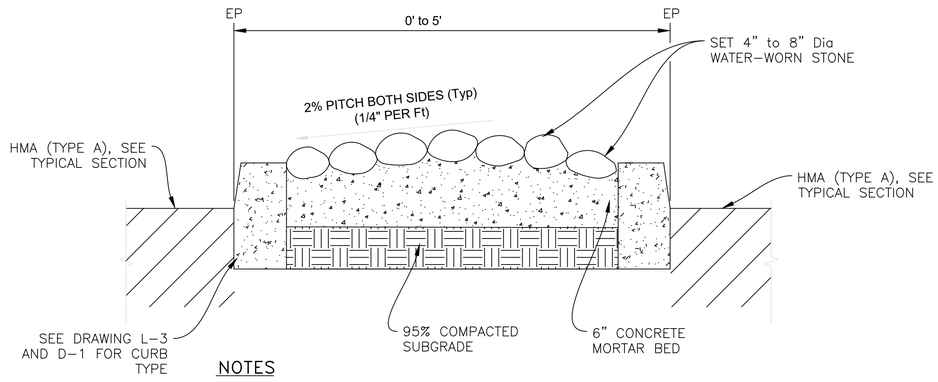

NOTES

1. AFTER THE COBBLESTONE HAS BEEN SET INTO THE MORTAR, THE EXCESS MORTAR IN BETWEEN THE JOINTS OF THE COBBLESTONES SHALL BE CAREFULLY REMOVED AND RAKED IN A SMOOTH JOINT (NO PROTRUSION OF MORTAR WILL BE ALLOWED).
2. SEAL FINAL SURFACE WITH WATER SEALER.

4 COBBLESTONE SURFACE
SCALE: NTS

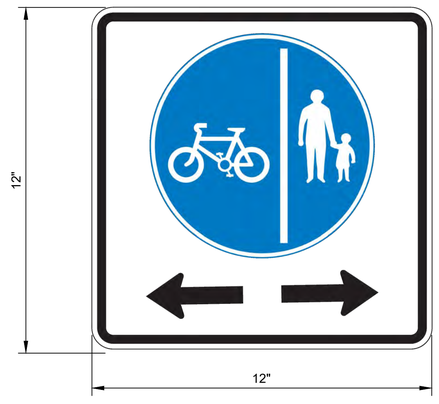

NOTES

1. SIGN IS REVERSED IN A MIRROR IMAGE, AS APPROPRIATE.
2. FINAL SIGN LAYOUT TO BE APPROVED BY CITY.

6 PATHWAY SIGN
SCALE: NTS

Parisi TRANSPORTATION CONSULTING
1750 Bridgeway, Suite B208
Sausalito, CA 94965
(415) 649-6000

DRAWN:	CHECKED:
AT	AL
DESIGNED:	APPROVED:
PAH	DP

REGISTERED PROFESSIONAL ENGINEER DAVID J. PARISI No. 46893 Exp. 03/22 CIVIL STATE OF CALIFORNIA

TAM Transportation Authority of Marin

CITY OF LARKSPUR
DOHERTY DRIVE SAFE PATHWAYS TO SCHOOL PROJECT
DETAILS

CITY OF LARKSPUR CALIFORNIA

REVISIONS	
5	
4	
3	
2	
1	REVISED BASED ON PHASE 1 CONSTRUCTED IN 2020.
NO.	DESCRIPTION

DATE	SCALE
04/16/2021	NO SCALE
PTC PROJECT NO.	
15035	
DRAWING	
D-2	
SHEET NO.	
11 OF 12	

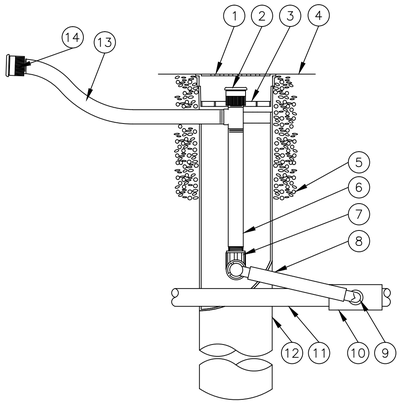

1. 4–INCH GRATE (INCLUDED)
2. BUBBLER: RAIN BIRD 1402 0.50 GPM (INCLUDED)
3. ROOT WATERING SYSTEM: RAIN BIRD RWS–BG02 (INCLUDES 1402 0.50 GPM BUBBLER WITH RISER, GRATE, SWING ASSEMBLY, 1/2" MALE NPT INLET, AND BASKET CANISTER)
4. FINISH GRADE
5. OPTIONAL PEA GRAVEL OR RWS SAND SOCK (RWS–SOCK) FOR SANDY SOILS
6. 1/2–INCH PVC SCH 80 NIPPLE (INCLUDED)
7. 1/2–INCH 90–DEGREE ELBOW (INCLUDED)
8. 12–INCH SWING ASSEMBLY (INCLUDED)
9. 1/2–INCH MALE NPT INLET (INCLUDED)
10. PVC SCH 40 TEE OR EL
11. LATERAL PIPE
12. 4–INCH BASKET WEAVE CANISTER (INCLUDED)
13. 1/2 INCH FLEX PVC, LENGTH TO REACH ROOTBALL
14. RAINBIRD 1402 BUBBLER AT ROOTBALL WITH 1/2" MALE NPT INLET, PROVIDE TEE AT RISER

TREE ROOT BUBBLER

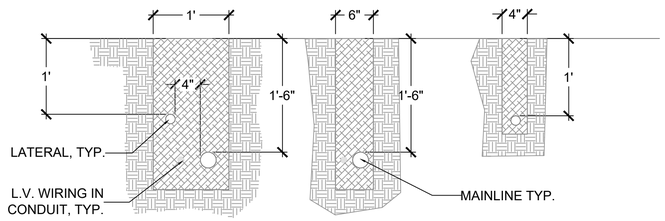

NOTES:

1. INSTALL 3" WIDE DETECTABLE WARNING TAPE 12" MIN. ABOVE MAINLINE.
2. SALVAGED EXCAVATED FILL COMPACTED TO ORIGINAL DENSITY IN ALL LANDSCAPED AREA, ALL OTHER AREAS SHALL BE AT 95% COMPACTION.
3. FOR ALL SLEEVES, 18" COVER MIN. PROVIDE 90ELL AT BOTH ENDS AND EXTEND CAPPED, SLEEVE DIAMETER PIPE TO SURFACE.
4. IN THE EVENT OF AN IRRIGATION LINE CONFLICTING WITH A DRAIN LINE, THE DRAIN LINE HAS PRIORITY. IF PROPER COVERAGE CANNOT BE ATTAINED ABOVE THE DRAIN LINES, THE IRRIGATION PIPES AND SLEEVES WILL BE INSTALLED BENEATH THE DRAIN LINE WITH 2" MIN. SEPARATION.

TRENCHING AT PAVING

1. ALL EXCAVATION, BACKFILL, AND RESURFACING MUST MEET MARIN COUNTY STANDARD PLAN 991 AND 992. FOR TRENCH AND RESURFACING.
2. EXCAVATIONS THAT HAVE NOT BEEN BACKFILLED PERMANENTLY BY THE END OF THE WORK PERIOD SHALL BE COVERED WITH STEEL PLATES STRONG ENOUGH TO SUPPORT PREVAILING TRAFFIC. PLATE BRIDGING SHALL BE SECURED AGAINST MOVEMENT. PLATES USED FOR BRIDGING SHALL EXTEND ONE-FOOT MINIMUM BEYOND EDGES OF TRENCH. TEMPORARY PAVING MATERIALS (PREMIX) SHALL BE USED TO FEATHER THE EDGES OF THE PLATES TO MINIMIZE WHEEL IMPACTS.
3. COMPACTION TESTING AND REPORTS ARE REQUIRED FOR ALL COMPACTION OF TRENCH FILL MATERIAL. MATERIALS SHALL BE COMPACTED IN ACCORDANCE WITH THE "ALL CITIES AND COUNTY OF MARIN, STANDARD SPECIFICATIONS AND CONSTRUCTION DETAILS."
4. BACKFILL SHALL BE CONTROL DENSITY FILL (CDF), OR OTHER APPROVED SLURRY BACKFILL.
5. PAVEMENT MUST BE SAND-SEALED TO A WIDTH EXCEEDING THE TRENCH EDGES BY 1' IN ALL DIRECTIONS.

TRENCHING

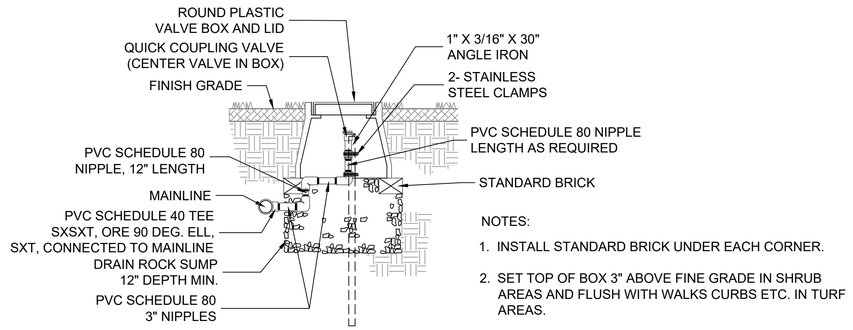

NOTES:

1. INSTALL STANDARD BRICK UNDER EACH CORNER.
2. SET TOP OF BOX 3" ABOVE FINE GRADE IN SHRUB AREAS AND FLUSH WITH WALKS CURBS ETC. IN TURF AREAS.

QUICK COUPLER VALVE

NOTES:

1. INSTALL STANDARD BRICK UNDER EACH CORNER.
2. SET TOP OF BOX 3" ABOVE FINE GRADE IN SHRUB AREAS AND FLUSH WITH WALKS CURBS ETC. IN TURF AREAS.

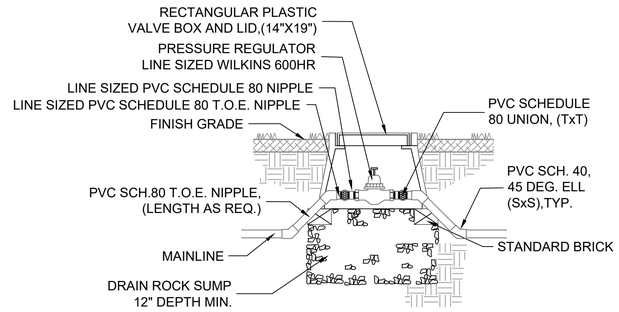

PRESSURE REDUCING VALVE

NOTES:

1. ALL VALVE BOXES AND LIDS TO BE PLASTIC.
2. CENTER VALVE BOX OVER EQUIPMENT ASSEMBLY TO FACILITATE SERVICING
3. SET BOX AND ASSEMBLY IN GROUNDCOVER/SHRUB AREA WHERE POSSIBLE.
4. SET BOXES PARALLEL TO EACH OTHER AND PERPENDICULAR TO EDGE.
5. AVOID HEAVY COMPACTION OF SOIL AROUND BOXES TO PREVENT DAMAGING VALVE BOX SIDES.
6. SET ALL BOXES FLUSH WITH WALKS, CURBS, ETC.. INALL CASES.
7. SET BOXES WITH STANDARD BRICK UNDER EACH CORNER OR IN CASE OF ROUND BOX USE TWO BRICKS 180 DEGREES APART.
8. MAKE SURE ALL VALVE BOXES HAVE BOLTS.
9. SEAL OPENINGS TO PREVENT ENTRANCE OF SOIL INTO BOXES.

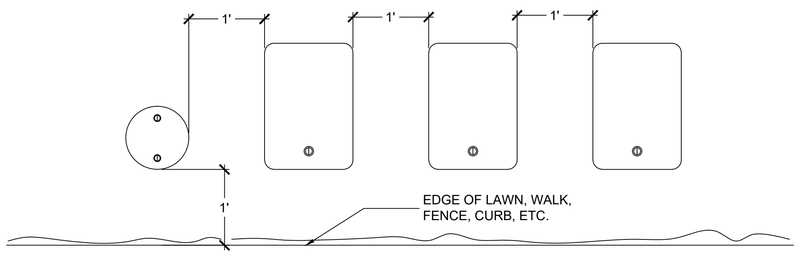

VALVE BOX INSTALLATION

NOTES:

1. ALL COPPER TO BE TYPE 'L'
2. PROVIDE SUPPORTS FOR 3" AND LARGER UNITS PER MANUFACTURERS SPECIFICATIONS

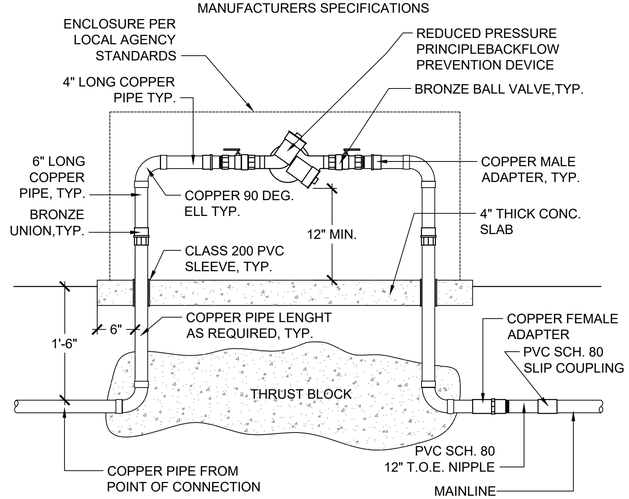

BACKFLOW PREVENTER INSTALLATION

NOTES:

1. INSTALL STANDARD BRICK UNDER EACH CORNER.
2. SET TOP OF BOX 3" ABOVE FINE GRADE IN SHRUB AREAS AND FLUSH WITH WALKS CURBS ETC. IN TURF AREAS.

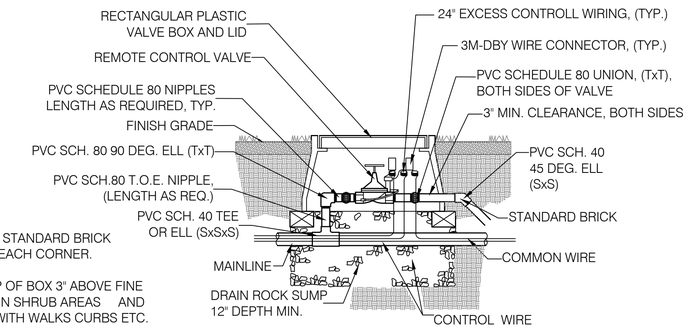

REMOTE CONTROL VALVE

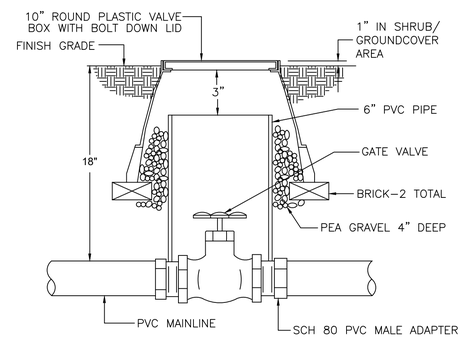

GATE VALVE

DRAWN:	PA
CHECKED:	PA
DESIGNED:	PA
APPROVED:	PA

LICENSED LANDSCAPE ARCHITECT — Armolee Arcilla — Signature 03-31-18 — Renewal Date 04-22-16 — Date — STATE OF CALIFORNIA

CITY OF LARKSPUR
DOHERTY DRIVE / LUCKY DRIVE SAFE PATHWAY PROJECT
IRRIGATION DETAILS

REVISIONS	
5	
4	
3	
2	
1	REVISED BASED ON PHASE 1 CONSTRUCTED IN 2020.
NO.	DESCRIPTION

DATE	04/16/2021
SCALE	NO SCALE
PTC PROJECT NO.	15035
DRAWING	D-3
SHEET NO.	12 OF 12

Project Information

1. Project Sponsor

Provide the name of the agency sponsoring the project.

Marin County Parks

2. Project Title

50 character maximum length - the character count is in italics to the right of the input cell

Mill Valley Sausalito Pathway Resurfacing Project

3. Project Description

750 character maximum length - the character count is in italics to the right of the input cell

The 1.4 mile portion of 10' wide Class 1 pathway from Gate 6 to Almonte Boulevard, has not been repaved or resurfaced since 1981. This busy pathway sees on average 2,500 users per day and over 5,000 on busy days. It serves as a key non-motorized commuter link, as well as being part of the Safe Routes to Schools, Bay Trail, and North-South Greenway routes. The southern pathway is deteriorated, with extensive longitudinal and transverse cracking, depressions, and raveling. This project will address short-term maintenance issues through a micro-surfacing and crack sealing treatment, for an overall improved pathway surface.

4. Project Limits

750 character maximum length - the character count is in italics to the right of the input cell. If applicable, provide the names of each street, highway, or other facility with proposed improvements and the limits of the proposed improvements along each facility.

The project limits will extend the full 10' width of the existing pathway asphalt (excluding the gravel shoulders) stretching from Almonte Boulevard entry, through Bothin Marsh and over Coyote Creek to Gate 6 Road (project will end at new paving as part of the CalTrans/City of Sausalito intersection work).

5. Describe how this project will support equity

Describe how this project will support equity by identifying any of the following populations which may benefit from the project: Low-Income populations, Minority populations, Seniors 75 Years and Over, Zero-Vehicle Households, Level of English Proficiency, Single Parent Households, People with a Disability, or Rent-Burdened Households (the map below contains data related to the aforementioned populations within selected census tracts)

https://opendata.mtc.ca.gov/datasets/28a03a46fe9c4df0a29746d6f8c633c8_0?geometry=-130.715%2C37.123%2C-114.026%2C38.640

This flat 3.7 mile Class 1 pathway, which passes through some of the most scenic bay marshes in Marin (Bothin Marsh), is one of the most well used park properties in the entire county, offering easy access to people of all abilities, all ages, and fitness levels. It serves as a critical commuter link between San Francisco, Marin City, and Sausalito commuters to the northern Marin (or beyond when combined with with SMART), especially for those who do not have cars as it provides safe access under the 101 highway corridor. The pathway allows Class 1 and 2 eBikes, which have become more commonly used for commuting. This pathway maintenance project supports Plan Bay Area 2050 Equity priorities, providing direct and potential benefits to people of color, low-income, disabled, zero-vehicle, and senior communities. The improved surfacing,will help to maintain and support the continued use and overall user experience for the pathway.

6. Additional project information

Provide additional information related to the project for consideration during review of this application.

This project is a critical transportation link for commuters and immense recreation resource for the general public as the only bicycle/pedestrian path between Sausalito/Marin City and Tam Valley/Mill Valley and all points north. Marin County Parks is committed to delivering this project and have engaged with key stakeholders who are supportive of this project including MCBC, Marin County Supervisor Stephanie Moulton-Peters, City of Sausalito, City of Mill Valley among others.

7. Project maps

If available, provide a location map showing the location of the project in the region and an area specific map showing the project limits. Maps should be submitted electronically. (SEE ATTACHED)

8. PSR

If available, provide a copy of the PSR or PSR Equivalent as part of a complete application package. (SEE Cost and Status #10)

Project Cost/Schedule/Status Information

9. Project cost, schedule and status

Provide the requested information related to the project cost, schedule and status by phase. Use the spaces below for additional cost, schedule and status information.

Project Phase	Cost	Schedule		Status
	Phase Total $ x 1,000	Begin (Mo/Yr)	End (Mo/Yr)	% Phase Complete
Scoping/Conceptual Planning	$ 10,000	8/2019	3/2020	100%
Environmental/Prelim. Engineering (PA&ED)	$ 30,000	3/20	8/2021	95%
PS&E (Final Design)	$ 40,000	01/20	8/2021	95%
Right of Way	n/a			
Utility Relocation/Protection	n/a			
Construction	$ 200,000	09/2021	10/2021	0%
Construction Engineering	$ 25,000	09/21	10/2021	0%
Other (enter phase name here)				
Total Estimated Costs	**$ 305,000**			

10. Additional cost/schedule/status information

Provide additional information related to the project cost, schedule and/or status in the space provided below. Include a list of any unresolved issues that may significantly affect the project information in the table above.

At this time, the maintenance project is still under regulatory agency review for permits to which applications were submitted in July 2020. Due to agency staffing impacted by the current California drought, a timeline for obtaining all regulatory approvals is not available. Construction documents (100%) are being finalized with a tentative goal to be ready for public bidding at end of August 2021, with implementation subject to obtaining regulatory permit authorizations*. A Notice of Exemption was filed, completing compliance with the California Environmental Quality Act, in July 2020. The construction window is estimated between 2 and 4 weeks. There is potential for this project to be implemented in spring of 2022 if authorized by the regulatory agencies. Otherwise, implementation may occur in fall-winter 2022.

* permit special conditions may require changes to the construction documents.

Funding

11. Funds requested

Provide the amount of funds requested for this Call for Projects. Include the phase and fiscal year associated with the requested funds. Provide the requested amounts to the nearest thousand dollars.

Funds Requested (TDA or/and TFCA, or leave blank if no preference)	Phase	Fiscal Year (to be used)		Requested Amount
TDA	Construction	21/22		$100,000
			Total Funds Requested	**$ 100,000**

12. Other funds programmed

Provide the requested information related to any project funding currently programmed for this project. Be as specific as possible when entering the fund source. Include the phase and fiscal year associated with the currently programmed funds. Provide the programmed amounts to the nearest thousand dollars.

Source (TFCA, TDA, Measure A, Local General Fund, etc.)	Phase	Fiscal Year	Status of Fund (Identify as secured or pending)	Programmed Amount
Measure A Funds	Construction	21/22	pending project permitting and bids received	$ 100,000
Measure A Funds	Construction Engineerign	21/22	secured	$ 25,000
			Existing Total Funds Programmed	**$ 125,000**

13. Additional current programming information

If applicable, provide additional information related to the funds currently programmed to the project in the space provided below. Include a list of factors or issues that may affect the availability of the programmed funds.

Per the intent of Measure A funding, to the extent possible, such funds are to be leveraged with matching funds from other public and private partners. This application requests an approximately 50% match based on our engineers construction estimate . Marin County Parks Measure A funds will provide any additional funds to close the gap between any grant funding awarded, project construction award amount (lowest responsive bid) and, construction engineering/management costs.

Contact Information

14. Project Contact

(Provide the requested information for the individual repsonsible for delivering the project and maintaining the project scope, cost and schedule.)

Contact Name:	Tara McIntire
Contact Title:	Principal Landscape Architect
Contact Telephone:	415-521-8050
Contact Fax:	
Contact Email:	TMcIntire@marincounty.org

15. Project application completed by

(Provide the requested information for the individual who completed this application. If it is the same as the Project Contact information above, enter "same.")

Name:	SAME
Title:	
Telephone:	
Fax:	
Email:	

Mill Valley-Sausalito Pathway Resurfacing Project

06 July 2021_Multifund TFCA and TDA Application

Project Scope Map

NTS

Pathway resurfacing extents

MARIN COUNTY PARKS
PRESERVATION · RECREATION

Project Information

1. Project Sponsor

Provide the name of the agency sponsoring the project.

Town of Ross, CA

2. Project Title

50 character maximum length - the character count is in italics to the right of the input cell

Laurel Grove Safe Pathways Project Phase III

3. Project Description

750 character maximum length - the character count is in italics to the right of the input cell

The Laurel Grove Safe Pathways Project is an ongoing effort by Ross to provide a continuous and safe minimum 4' wide pathway for pedestrians walking to and from Ross School on Laurel Grove between Kentfield and Sir Francis Drake Boulevard. Laurel Grove is the only route available for pedestrians, bicyclists, and automobiles to get to/from the east side of Ross to Ross School/Common and downtown. Phase III of the project will continue south from the Phase II limits at Canyon Rd. toward the Ross Town Limit at Makin Grade. The project will require widening portions of Laurel Grove in Ross and may require some grading, retaining walls, and relocation of minor drainage facilities within the existing right of way to accommodate the pathway.

4. Project Limits

750 character maximum length - the character count is in italics to the right of the input cell. If applicable, provide the names of each street, highway, or other facility with proposed improvements and the limits of the proposed improvements along each facility.

The project limits would begin at the end of the current Phase II at Canyon Road and continue South toward the Town Limit at Makin Grade in Kentfield. The actual limits of Phase II would be dependant on funding, but suitable intermediate termination points would be at the intersection of Skyland Way or Winding Way.

5. Describe how this project will support equity

Describe how this project will support equity by identifying any of the following populations which may benefit from the project: Low-Income populations, Minority populations, Seniors 75 Years and Over, Zero-Vehicle Households, Level of English Proficiency, Single Parent Households, People with a Disability, or Rent-Burdened Households (the map below contains data related to the aforementioned populations within selected census tracts).

https://opendata.mtc.ca.gov/datasets/28a03a46fe9c4df0a29746d6f8c633c8_0?geometry=-130.715%2C37.123%2C-114.026%2C38.640

The Town of Ross is unique in Marin County with 33% of the population being seniors over the age of 60, including 13% over the age of 75 (source: ACS Census Bureau 2019). The project would facilitate active senior lifestyles by providing safe pedestrian access from Eastern Ross to Ross Common and the downtown district.

6. Additional project information

Provide additional information related to the project for consideration during review of this application.

The entire Laurel Grove Safe Pathways project and limits of work were defined in the adopted 2018 amendments to the "Town of Ross Bicycle and Pedestrian Master Plan". Construction of Phase II is expected to be completed in 2022.

7. Project maps

If available, provide a location map showing the location of the project in the region and an area specific map showing the project limits. Maps should be submitted electronically.

8. PSR

If available, provide a copy of the PSR or PSR Equivalent as part of a complete application package.

Project Cost/Schedule/Status Information

9. Project cost, schedule and status

Provide the requested information related to the project cost, schedule and status by phase. Use the spaces below for additional cost, schedule and status information.

Project Phase	Cost	Schedule		Status
	Phase Total $ x 1,000	Begin (Mo/Yr)	End (Mo/Yr)	% Phase Complete
Scoping/Conceptual Planning	$ 35	1/20	7/21	90%
Environmental/Prelim. Engineering (PA&ED)	$ 35	1/21	12/21	25%
PS&E (Final Design)	$ 300	12/22	12/23	0%
Right of Way	$ 25	12/23	3/24	0%
Utility Relocation/Protection	$ 150	3/24	6/24	0%
Construction	$ 350	3/25	9/25	0%
Construction Engineering	$ 35	3/24	3/25	0%
Other (enter phase name here)				
Total Estimated Costs	**$ 930**			

10. Additional cost/schedule/status information

Provide additional information related to the project cost, schedule and/or status in the space provided below. Include a list of any unresolved issues that may significantly affect the project information in the table above.

Funding

11. Funds requested

Provide the amount of funds requested for this Call for Projects. Include the phase and fiscal year associated with the requested funds. Provide the requested amounts to the nearest thousand dollars.

Funds Requested (TDA or/and TFCA, or leave blank if no preference)	Phase	Fiscal Year (to be used)		Requested Amount
	Envi/Prelim Eng	21-22		$ 25,000
	PS&E	22-23		$ 50,000
			Total Funds Requested	**$ 75,000**

12. Other funds programmed

Provide the requested information related to any project funding currently programmed for this project. Be as specific as possible when entering the fund source. Include the phase and fiscal year associated with the currently programmed funds. Provide the programmed amounts to the nearest thousand dollars.

Source (TFCA, TDA, Measure A, Local General Fund, etc.)	Phase	Fiscal Year	Status of Fund (Identify as secured or pending)	Programmed Amount
Town of Ross Roadway Fund, Measure AA	Envi/Prelim Eng	21-22	secured	$ 10,000
Town of Ross Roadway Fund, Measure AA	PS&E	22-23	pending	$ 250,000
			Existing Total Funds Programmed	**$ 260,000**

13. Additional current programming information

If applicable, provide additional information related to the funds currently programmed to the project in the space provided below. Include a list of factors or issues that may affect the availability of the programmed funds.

Contact Information

14. Project Contact

(Provide the requested information for the individual repsonsible for delivering the project and maintaining the project scope, cost and schedule.)

Contact Name:	Richard Simonitch
Contact Title:	Public Works Director
Contact Telephone:	415 453-1453
Contact Fax:	415 460-9761
Contact Email:	rsimonitch@townofross.org

15. Project application completed by

(Provide the requested information for the individual who completed this application. If it is the same as the Project Contact information above, enter "same.")

Name:	same
Title:	
Telephone:	
Fax:	
Email:	

Project Information

1. Project Sponsor

Provide the name of the agency sponsoring the project.

City of San Rafael

2. Project Title

50 character maximum length - the character count is in italics to the right of the input cell

Grand Avenue Class IV Cycle Track

3. Project Description

750 character maximum length - the character count is in italics to the right of the input cell

The proposed 600 foot long separated bikeway (Class IV) and sidewalk on Grand Avenue from Second Street to Fourth Street in San Rafael is top-ranked project in the Bicycle and Pedestrian Master Plan and a critical trail extension project on the San Francisco Bay Trail. This project would provide a safe and separated bicycle connection for residents and visitors of East San Rafael to the downtown business district and Bettini Transit Center. This project would carve out dedicated and protected space for pedestrians and bicyclists in the city's bustling downtown area alongside a multi-laned arterial street currently without any dedicated bicycle facilities and narrow sidewalks without buffers between pedestrians and moving vehicles.

4. Project Limits

750 character maximum length - the character count is in italics to the right of the input cell. If applicable, provide the names of each street, highway, or other facility with proposed improvements and the limits of the proposed improvements along each facility.

This two-way protected cycle track would start just north of the newly completed Grand Avenue bicycle and pedestrian bridge. It would extend from the southeast corner of Second Street and Grand Avenue to the southeast corner of Fourth Street and Grand Avenue. This project would connect cyclists to Fourth Street, the preferred east-west route through Central San Rafael. South of the proposed project and the new pedestrian-bike bridge, Francisco Boulevard East sidewalk is being widened to eight feet to better accomodate the pedestrians and bicyclists in the area.

5. Describe how this project will support equity

Describe how this project will support equity by identifying any of the following populations which may benefit from the project: Low-Income populations, Minority populations, Seniors 75 Years and Over, Zero-Vehicle Households, Level of English Proficiency, Single Parent Households, People with a Disability, or Rent-Burdened Households (the map below contains data related to the aforementioned populations within selected census tracts).

https://opendata.mtc.ca.gov/datasets/28a03a46fe9c4df0a29746d6f8c633c8_0?geometry=-130.715%2C37.123%2C-114.026%2C38.640

The Canal neighborhood of East San Rafael is the closest neighborhood to this project and is categorized by the MTC as an Equity Priority Community (EPC) based on percentages of low-income, people of color, limited English proficiency, and single parent families that are all above the Plan Bay Area thresholds. Currently the Canal neighborhood is physically isolated from other parts of San Rafael and the region by the Canal waterway, Highway 101 and Interstate 580 freeway. Limited shopping, education and health services are available within this EPC, requiring travel to other locations on limited pedestrian and bicycle networks. This includes downtown San Rafael and Marin County's busiest public transit hub. Further, Canal neighborhood residents are disproportionately reliant on walking, bicycling and public transit for transportation. By providing a separated bicycle facility and improved pedestrian facility, this project would contribute to TFCA's goals of reducing air pollution and greenhouse gas emissions, providing transportation options, and reducing traffic congestion.

6. Additional project information

Provide additional information related to the project for consideration during review of this application.

San Rafael is committed to improving mobility through the downtown area by way of signal improvements but also looking towards improving the travel experience for alternative modes. The goal is to make Central San Rafael more walkable and bikeable so residents and visitors of the area have alternative options they are comfortable using to travel through the area.

7. Project maps

If available, provide a location map showing the location of the project in the region and an area specific map showing the project limits. Maps should be submitted electronically.

8. PSR

If available, provide a copy of the PSR or PSR Equivalent as part of a complete application package.

Project Cost/Schedule/Status Information

9. Project cost, schedule and status

Provide the requested information related to the project cost, schedule and status by phase. Use the spaces below for additional cost, schedule and status information.

Project Phase	Cost	Schedule		Status
	Phase Total $ x 1,000	Begin (Mo/Yr)	End (Mo/Yr)	% Phase Complete
Scoping/Conceptual Planning	$ 16	9/2020	11/2020	100%
Environmental/Prelim. Engineering (PA&ED)	$ 30	1/2021	4/2021	100%
PS&E (Final Design)	$ 100	10/2021	3/2022	0%
Right of Way	$ -			
Utility Relocation/Protection	$ -	6/2022	8/2022	0%
Construction	$ 1,180	6/2022	9/2022	0%
Construction Engineering	$ 80	6/2022	9/2022	0%
Other (enter phase name here)				
Total Estimated Costs	**$ 1,406**			

10. Additional cost/schedule/status information

Provide additional information related to the project cost, schedule and/or status in the space provided below. Include a list of any unresolved issues that may significantly affect the project information in the table above.

Funding received under this grant will be put towards construction costs only. The City will provide other funding resources to cover engineering costs and any construction costs above the amount of grant funding received. All construction will occur within existing City public right of ways or easements. The City has the resources to begin this project immediately. The engineering and design phases are anticipated to take four to six months and construction can begin as soon as May 2022, depending on notification of grant award.

Funding

11. Funds requested

Provide the amount of funds requested for this Call for Projects. Include the phase and fiscal year associated with the requested funds. Provide the requested amounts to the nearest thousand dollars.

Funds Requested (TDA or/and TFCA, or leave blank if no preference)	Phase	Fiscal Year (to be used)		Requested Amount
	Construction	2022		$ 650,000
			Total Funds Requested	**$ 650,000**

12. Other funds programmed

Provide the requested information related to any project funding currently programmed for this project. Be as specific as possible when entering the fund source. Include the phase and fiscal year associated with the currently programmed funds. Provide the programmed amounts to the nearest thousand dollars.

Source (TFCA, TDA, Measure A, Local General Fund, etc.)	Phase	Fiscal Year	Status of Fund (Identify as secured or pending)	Programmed Amount
Bay Trail	Construction	2022-23	Pending	$ 225,000
			Existing Total Funds Programmed	**$ 225,000**

13. Additional current programming information

If applicable, provide additional information related to the funds currently programmed to the project in the space provided below. Include a list of factors or issues that may affect the availability of the programmed funds.

Contact Information

14. Project Contact

(Provide the requested information for the individual repsonsible for delivering the project and maintaining the project scope, cost and schedule.)

Contact Name:	Bill Guerin
Contact Title:	Public Works Director
Contact Telephone:	(415) 485-3110
Contact Fax:	
Contact Email:	bill.guerin@cityofsanrafael.org

15. Project application completed by

(Provide the requested information for the individual who completed this application. If it is the same as the Project Contact information above, enter "same.")

Name:	Lauren Davini
Title:	Traffic Engineer
Telephone:	(415) 485-3361
Fax:	
Email:	lauren.davini@cityofsanrafael.org

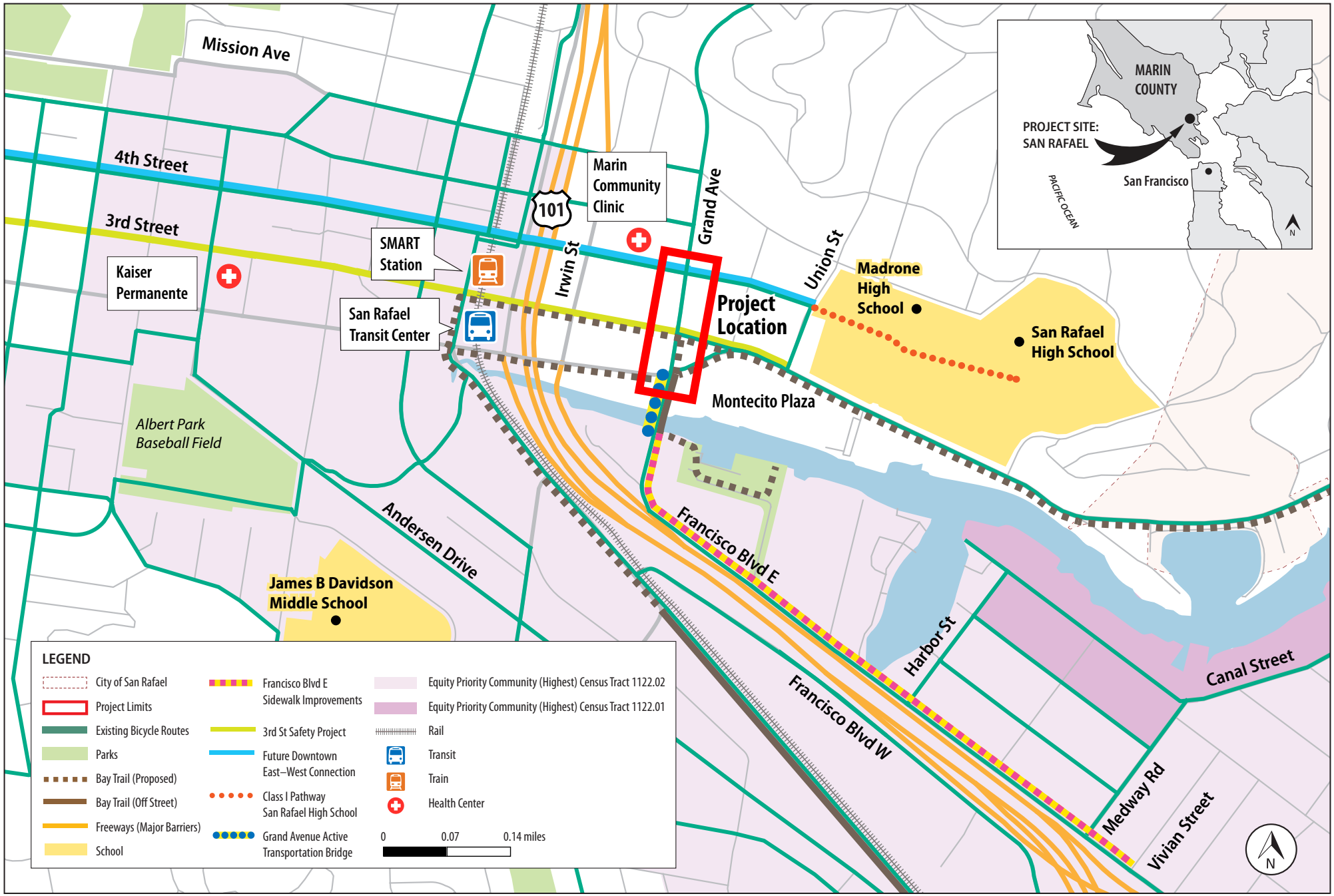

SAN RAFAEL
THE CITY WITH A MISSION

Grand Avenue Class IV Cycle Track
City of San Rafael

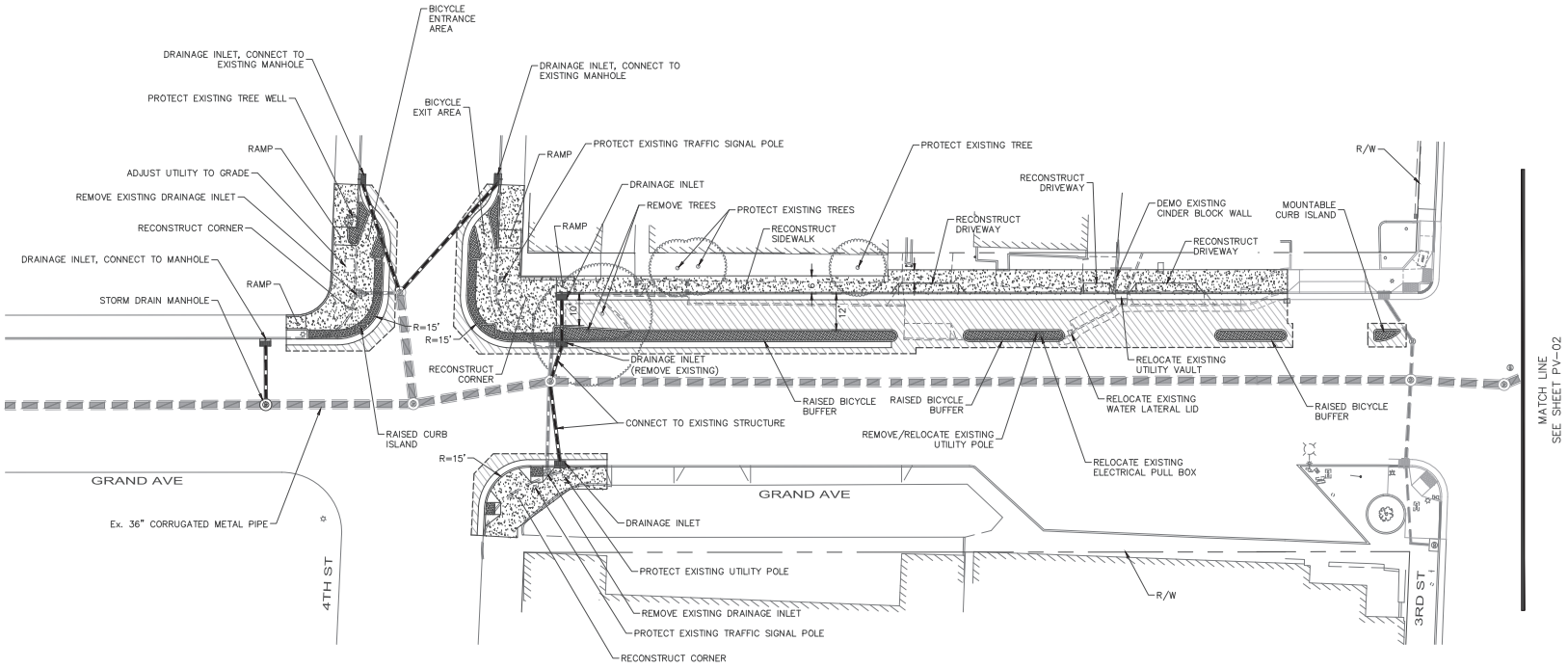

LEGEND

- LIMITS OF CONSTRUCTION / HOT MIX ASPHALT (HMA)
- PCC SIDEWALK / DRIVEWAY
- DETECTABLE WARNING SURFACE
- RAISED CURB (STAMPED CONCRETE)
- SAWCUT

GRAPHIC SCALE

20 0 10 20 40

(IN FEET)
1 inch = 20 ft.

GRAND AVE CYCLE TRACK UPGRADE

30% DESIGN PLANS

MARCH 2021

PV-01 SHEET 1 OF 6

30% DESIGN
FOR REVIEW ONLY
MARCH 2021

Kimley»Horn

Mar 31, 2021 – 11:53pm – USER Brendan.Pittman
K:\OAK_TFS\097023058 – San Rafael 3rd Street Safety Improvements – KGA\04_CADD\Exhibits\Cycle Track\30% Design\30% Plans.dwg

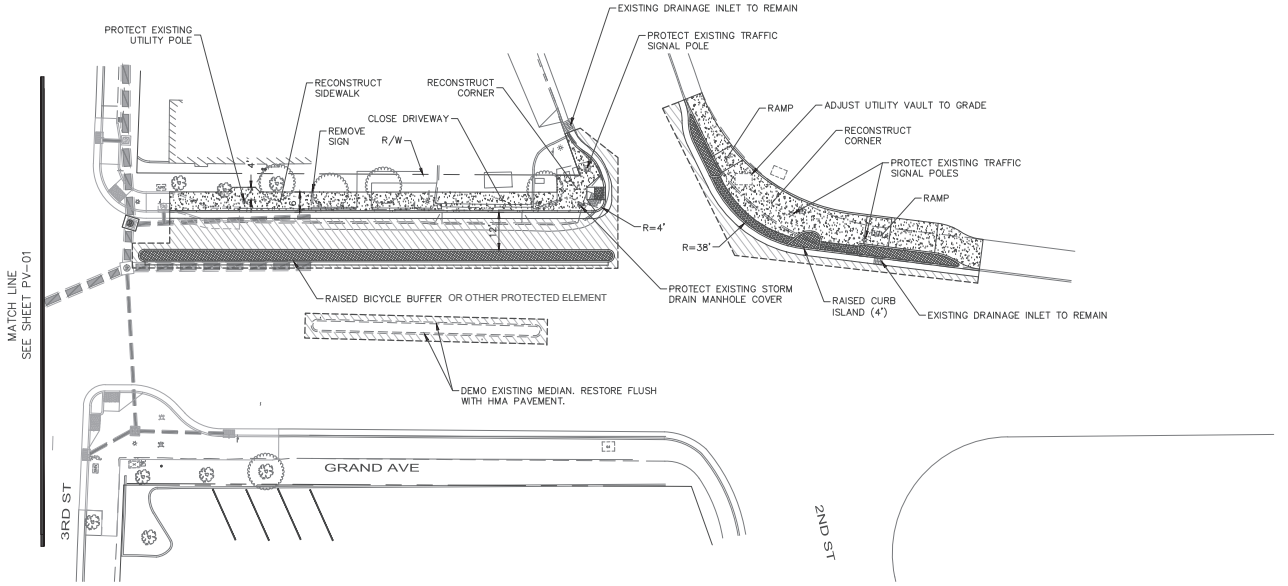

LEGEND

- LIMITS OF CONSTRUCTION / HOT MIX ASPHALT (HMA)
- PCC SIDEWALK / DRIVEWAY
- DETECTABLE WARNING SURFACE
- RAISED CURB (STAMPED CONCRETE)
- SAWCUT

GRAPHIC SCALE

20 0 10 20 40

(IN FEET)
1 inch = 20 ft.

GRAND AVE CYCLE TRACK UPGRADE

30% DESIGN PLANS

MARCH 2021

PV-02 SHEET 2 OF 6

30% DESIGN
FOR REVIEW ONLY
MARCH 2021

Kimley»Horn

Mar 31, 2021 – 11:54am – USER Brendan.Pittman
K:\OAK_JTS\097023058 – San Rafael 3rd Street Safety Improvements – KGA\04_CADD\Exhibits\Cycle Track\30% Design\30% Plans.dwg

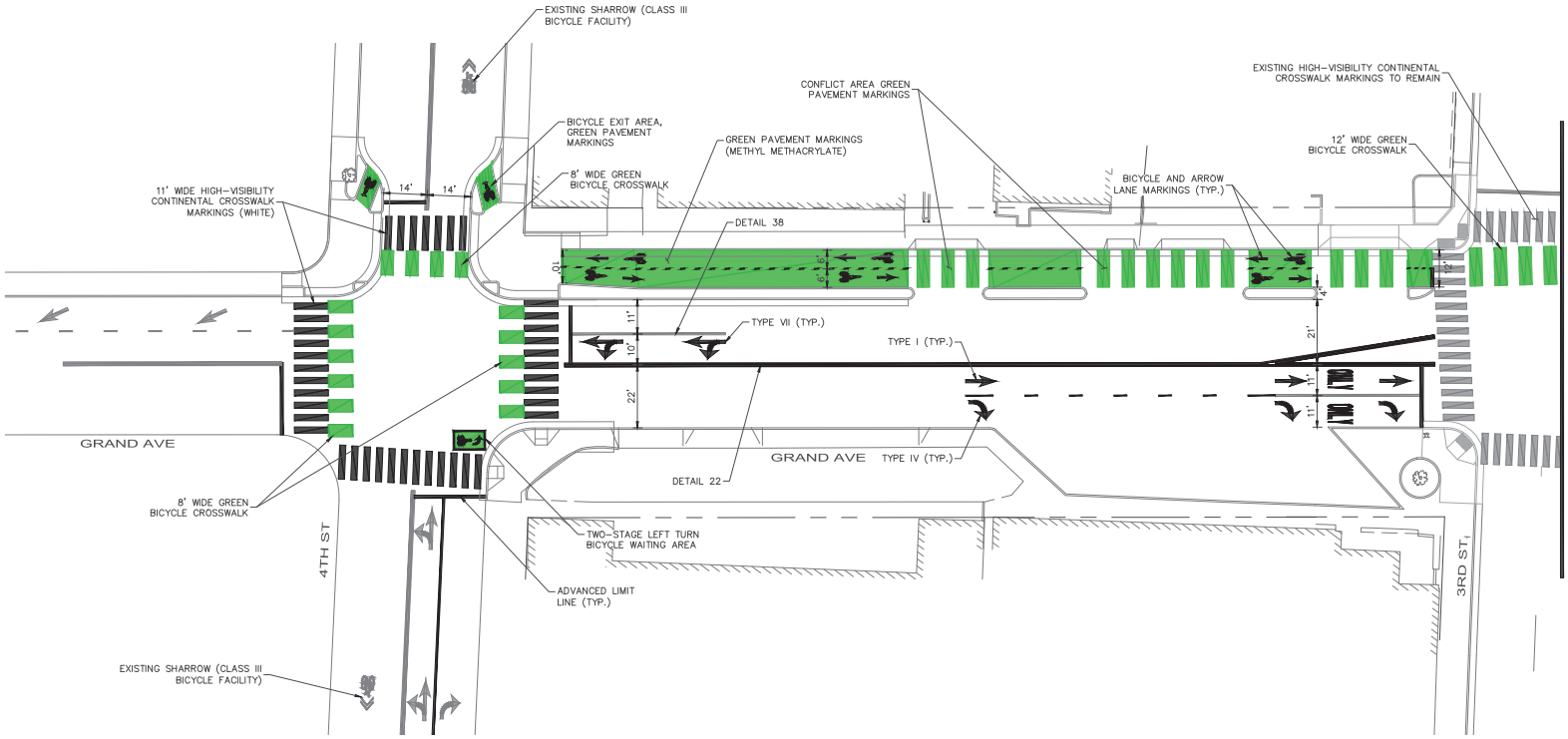

Note: PAVEMENT MARKING REMOVAL QUANTIFIED BUT NOT SHOWN ON THESE PLANS

GRAPHIC SCALE

20 0 10 20 40

(IN FEET)
1 inch = 20 ft.

GRAND AVE CYCLE TRACK UPGRADE

30% DESIGN PLANS

MARCH 2021

SS-01 **SHEET 3 OF 6**

30% DESIGN FOR REVIEW ONLY MARCH 2021

Kimley»Horn

Mar 31, 2021 - 2:26pm - USER Brendan.Pittman
K:\OAK_TTS\097023058 - San Rafael 3rd Street Safety Improvements - KGA\04_CADD\Exhibits\Cycle Track\30% Design\30% Plans.dwg

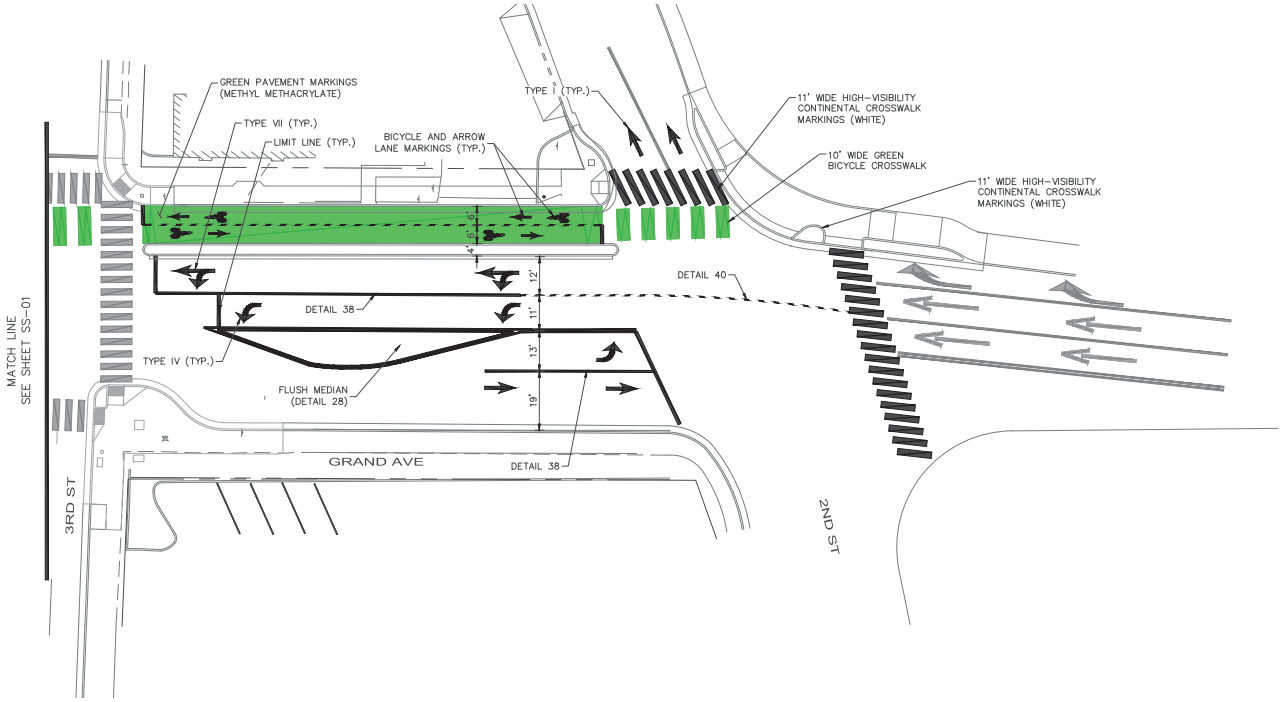

Note: PAVEMENT MARKING REMOVAL QUANTIFIED BUT NOT SHOWN ON THESE PLANS

GRAPHIC SCALE

20 0 10 20 40

(IN FEET)
1 inch = 20 ft.

GRAND AVE CYCLE TRACK UPGRADE

30% DESIGN PLANS

MARCH 2021

SS-02 SHEET 4 OF 6

30% DESIGN FOR REVIEW ONLY MARCH 2021

Kimley»Horn

Mar 31, 2021 - 11:55pm - USER Brendan.Pittman
K:\DAK_JTS\097023058 - San Rafael 3rd Street Safety Improvements - KGA\04_CADD\Exhibits\Cycle Track\30% Design\30% Plans.dwg

GRAND AVE / 4TH ST - TRAFFIC SIGNAL MODIFICATION

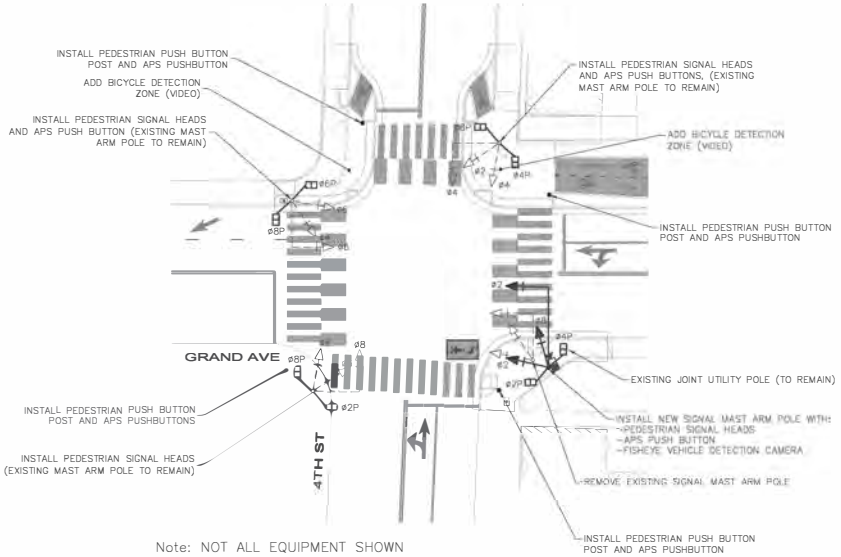

Note: NOT ALL EQUIPMENT SHOWN

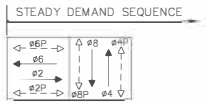

EXISTING & PROPOSED PHASE DIAGRAM

GRAND AVE / 3RD ST - TRAFFIC SIGNAL MODIFICATION

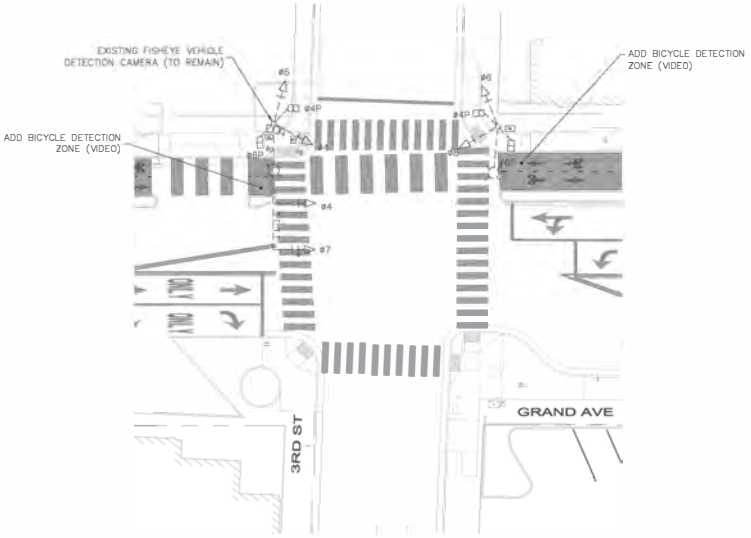

Note: NOT ALL EQUIPMENT SHOWN

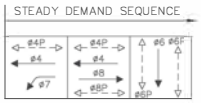

EXISTING & PROPOSED PHASE DIAGRAM

GRAPHIC SCALE

(IN FEET)
1 inch = 20 ft.

GRAND AVE CYCLE TRACK UPGRADE

30% DESIGN PLANS

MARCH 2021

TS-01 SHEET 5 OF 6

30% DESIGN
FOR REVIEW ONLY
MARCH 2021

Kimley»Horn

Mar 31, 2021 - 2:26pm - USER Brendan.Pittman
K:\OAK_JTS\097023058 - San Rafael 3rd Street Safety Improvements - KGA\04_CADD\Exhibits\Cycle Track\30% Design\30% Plans.dwg

GRAND AVE / 2ND ST - TRAFFIC SIGNAL MODIFICATION

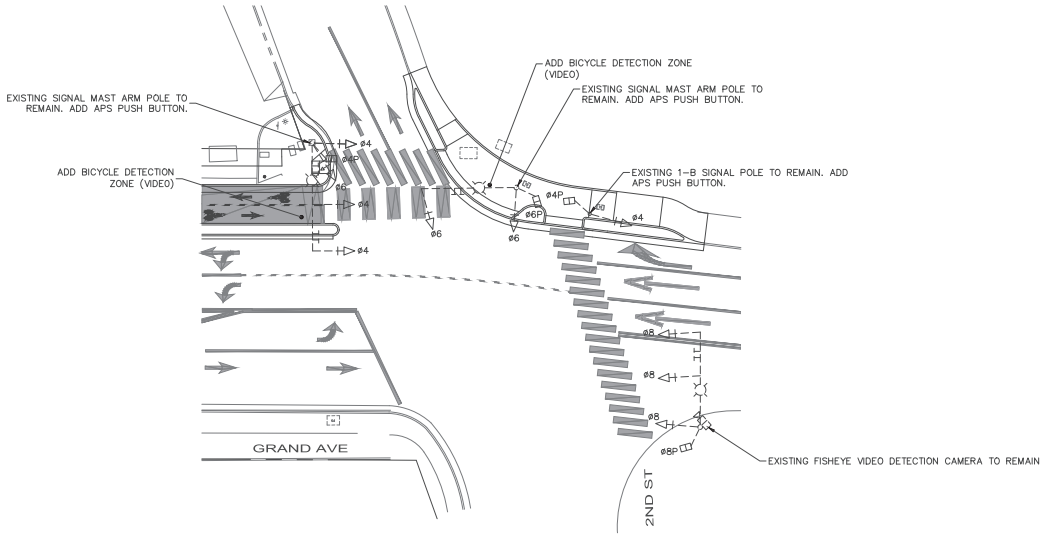

Note: NOT ALL EQUIPMENT SHOWN

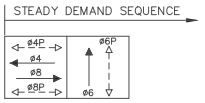

EXISTING AND PROPOSED PHASE DIAGRAM

GRAPHIC SCALE

20 0 10 20 40

(IN FEET)
1 inch = 20 ft.

GRAND AVE CYCLE TRACK UPGRADE

30% DESIGN PLANS

MARCH 2021

TS-02 **SHEET 6 OF 6**

30% DESIGN FOR REVIEW ONLY MARCH 2021

Kimley»Horn

Mar 31, 2021 - 11:55pm - USER Brendan.Pittman
K:\OAK_JTS\097023058 - San Rafael 3rd Street Safety Improvements - KGA\04_CADD\Exhibits\Cycle Track\30% Design\30% Plans.dwg

Project Information

1. Project Sponsor

Provide the name of the agency sponsoring the project.

Transportation Authority of Marin

2. Project Title

50 character maximum length - the character count is in italics to the right of the input cell

North - South Greenway Gap Closure Project in Central Marin - Northern Segment

3. Project Description

750 character maximum length - the character count is in italics to the right of the input cell

Caltrans, in cooperation with TAM and the City of Larkspur, propose improvements to pedestrian and bicycle facilities along the northbound Highway 101 off-ramp to Sir Francis Drake Boulevard. The improvements will include the construction of a new Class I multi-use path that would connect the Central Marin Ferry Connector bridge that crosses Sir Francis Drake Boulevard with the Pedestrian Overcrossing of Highway 101 in the City of Larkspur. The project will replace the existing narrow sidewalk along the Northbound off-ramp with a wider multi-use pathway and will improve pedestrian and bicycle access along a section of Old Redwood Highway. This project will greatly enhance safety and accessibility for non-

4. Project Limits

750 character maximum length - the character count is in italics to the right of the input cell. If applicable, provide the names of each street, highway, or other facility with proposed improvements and the limits of the proposed improvements along each facility.

The project will close a significant gap in the non-motorized transportation network. With the completion of the segment in central San Rafael, the openning of the CalPark Tunnel Patheway and the new bicycle and pedestrian bridge over Sir Francis Drake Blvd this next segment will extend the paths from the north to the Pedestrian Overcrossing over US101 in Larkspur. The specific project limits extend from US 101 Post Mile (PM) 8.2 to 8.7.

5. Describe how this project will support equity

Describe how this project will support equity by identifying any of the following populations which may benefit from the project: Low-Income populations, Minority populations, Seniors 75 Years and Over, Zero-Vehicle Households, Level of English Proficiency, Single Parent Households, People with a Disability, or Rent-Burdened Households (the map below contains data related to the aforementioned populations within selected census tracts)

https://opendata.mtc.ca.gov/datasets/28a03a46fe9c4df0a29746d6f8c633c8_0?geometry=-130.715%2C37.123%2C-114.026%2C38.640

By creating a low impact fully accessible path of travel connecting the bus stops at Lucky Drive with other modes of transportation such as the Larkspur Ferry Terminal and the passenger rail service operated by SMART the project will provide a means of access to multiple businesses in the area which provide employement for low to medium paying jobs both north and south of the project limits. Job seekers in the canal section of San Rafael will be provided with the means to access jobs without the need or use of a vehicle. Seniors who bike or walk this area will have a more scenic and accessible path of travel as compared to the existing steep and narrow crossing of Corte Madera Creek.

6. Additional project information

Provide additional information related to the project for consideration during review of this application.

The creation of an improved bicycle and pedestrian crossing of Corte Madera Creek as an element of the North South Greenway has been envisioned and studied for decades. TAM began initial studies in 2005 as part of the Greenbrae Corridor Highway Studies. Attention was directed to the current project and has been diligently pursued since 2015. TAM sponsored the project development process during the environmental and design phase and now Caltrans is administering the construction phase. The project is in construction and has encountered a number of unforeseen existing condition that has caused delay for the contractor and increased project costs.

7. Project maps

If available, provide a location map showing the location of the project in the region and an area specific map showing the project limits. Maps should be submitted electronically.

8. PSR

If available, provide a copy of the PSR or PSR Equivalent as part of a complete application package.

Project Cost/Schedule/Status Information

9. Project cost, schedule and status

Provide the requested information related to the project cost, schedule and status by phase. Use the spaces below for additional cost, schedule and status information.

Project Phase	Cost	Schedule		Status
	Phase Total $ x 1,000	Begin (Mo/Yr)	End (Mo/Yr)	% Phase Complete
Scoping/Conceptual Planning				100%
Environmental/Prelim. Engineering (PA&ED)	$ 1,000			95%
PS&E (Final Design)	$ 3,000			95%
Right of Way				
Utility Relocation/Protection				
Construction	$ 10,336			15%
Construction Engineering	$ 2,100			15%
CON + CON Engineering Old Redwood Highway	$ 1,275			0%
Total Estimated Costs	**$ 17,711**			

10. Additional cost/schedule/status information

Provide additional information related to the project cost, schedule and/or status in the space provided below. Include a list of any unresolved issues that may significantly affect the project information in the table above.

Construction is well underway for the segment in Caltrans Right-of-way . Due to the number of unforeseen conditions Caltrans is estimating a shortfall of between $1-$2 million dollars. Because TAM is the sponsor we are responsible to fill the funding gap. We are pursuing all funding options as well a removing scope from the construction contract.

Funding

11. Funds requested

Provide the amount of funds requested for this Call for Projects. Include the phase and fiscal year associated with the requested funds. Provide the requested amounts to the nearest thousand dollars.

Funds Requested (TDA or/and TFCA, or leave blank if no preference)	Phase	Fiscal Year (to be used)		Requested Amount
TDA	CON	FY21/22		$315,000
			Total Funds Requested	**$ 315,000**

12. Other funds programmed

Provide the requested information related to any project funding currently programmed for this project. Be as specific as possible when entering the fund source. Include the phase and fiscal year associated with the currently programmed funds. Provide the programmed amounts to the nearest thousand dollars.

Source (TFCA, TDA, Measure A, Local General Fund, etc.)	Phase	Fiscal Year	Status of Fund (Identify as secured or pending)	Programmed Amount
RM2	Env, Design, Con, Con Support	FY2015-2022	Secured	$14,100,000.00
SB1 LPP	CON	FY21-22	Secured	$ 1,500,000
TFCA	CON	FY21-22	Secured	$ 283,000
Local	Design, Con Support	FY18-FY22	Secured	$ 1,250,000
			Existing Total Funds Programmed	**$ 17,133,000**

13. Additional current programming information

If applicable, provide additional information related to the funds currently programmed to the project in the space provided below. Include a list of factors or issues that may affect the availability of the programmed funds.

Additional funds are needed to close the funding gap. TAM staff pursuing other options but they are limited. Caltrans investigating scope reduction to help close the gap and deliver project to meet the overall purpose and need.

Contact Information

14. Project Contact

(Provide the requested information for the individual repsonsible for delivering the project and maintaining the project scope, cost and schedule.)

Contact Name:	Bill Whitney
Contact Title:	Project Manager
Contact Telephone:	415 226-0823
Contact Fax:	
Contact Email:	bwhitney@tam.ca.gov

15. Project application completed by

(Provide the requested information for the individual who completed this application. If it is the same as the Project Contact information above, enter "same.")

Name:	Bill Whitey
Title:	Project Manager
Telephone:	415.226.0823
Fax:	
Email:	bwhitney@tam.ca.gov

THE NORTH SOUTH GREENWAY

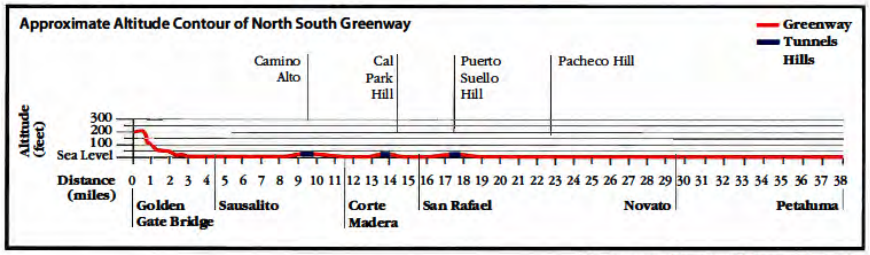

© Transportation Alternatives for Marin – 2014 – v11.4

San Rafael
San Rafael SMART Station
San Rafael
Bettini Transit Center
San Rafael Multi Use Path
(2nd Street to Andersen Drive)
CalPark Tunnel
Path
San Rafael - Larkspur
Rail Extension
Larkspur Station
CMFC Bridge over
Sir Francis Drake Blvd
Greenbrae
North Segment
N/S Greenway Gap Closure Project
in Larkspur
South Segment
Larkspur
N
TAM
Transportation Authority of Marin
Central Marin North-South Greenway

Project Goals

- Close the “Gap” in the Non-Motorized Transportation Network
- Encourage Bicycling and Walking for Transportation and Recreation
- Provide a Safe and Accessible Path of Travel
- Avoid Potential Project Impacts on the Environment
- Maintain Existing Navigational Channel Clearances

Typical Cross-Section Using Existing Bents

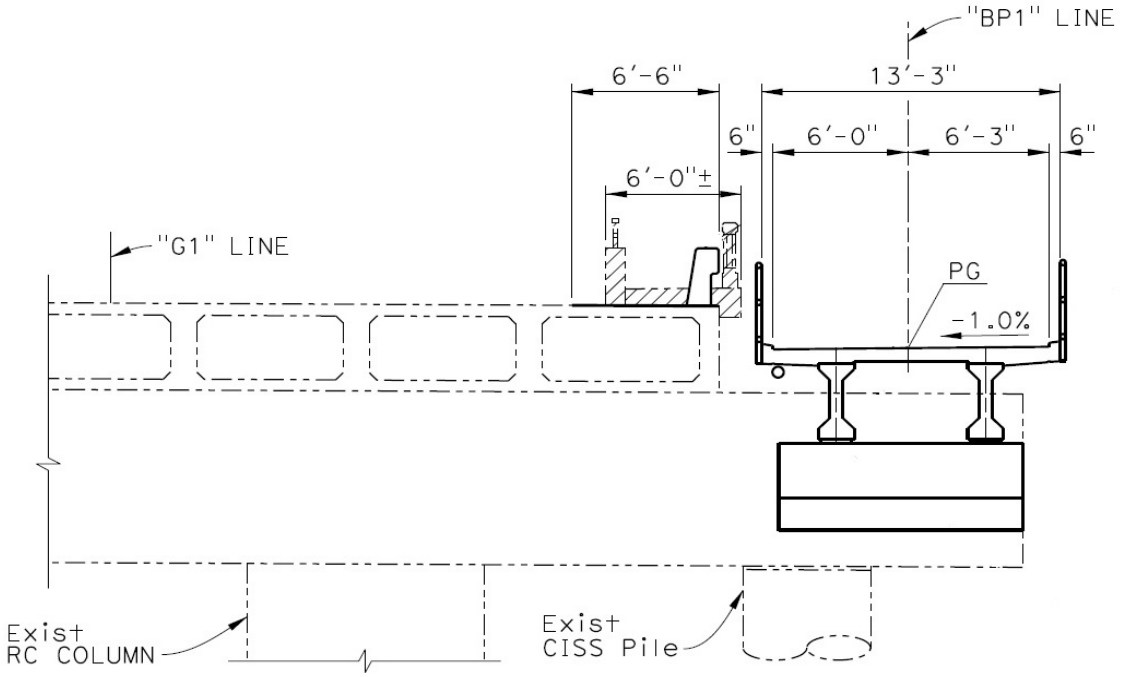

PROPOSED PROFILE

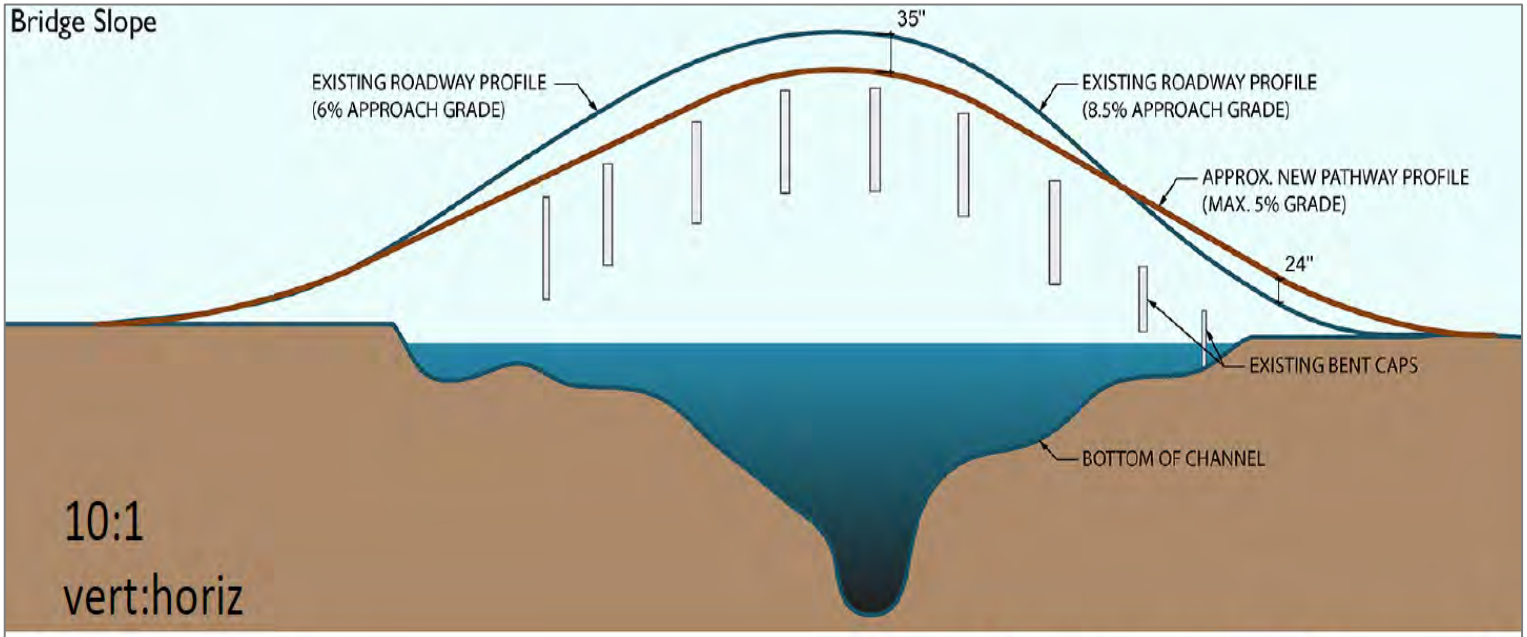

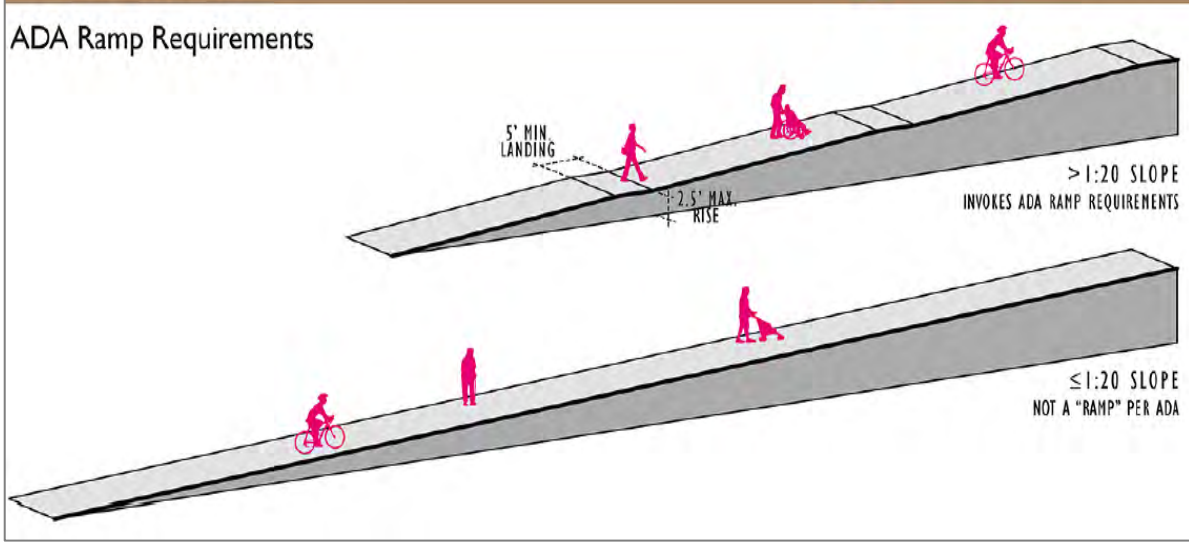

Ramp to Overcrossing | 1:12 Chengdu, China

Berkeley I-80 Bridge Ramp | 1:20 Berkeley, CA

BRIDGE MULTI-USE PATHWAY

Pathway Above Roadway

Pathway Below Roadway

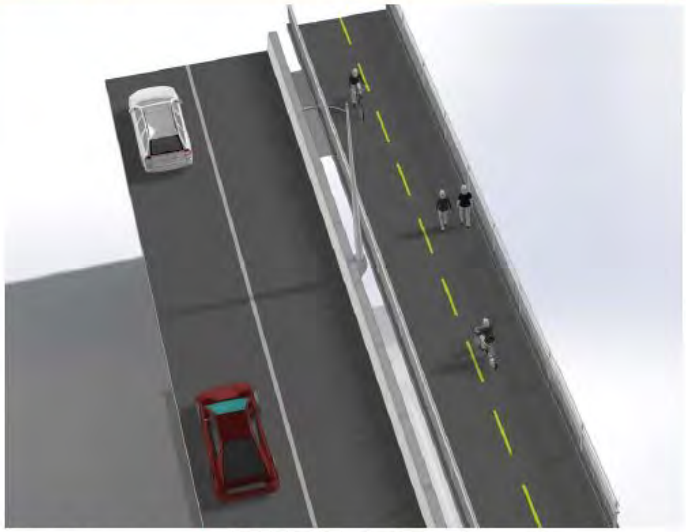

Aerial Perspective Multi-Use Pathway

Multi-Use Path Alignment

Multi-Use Path Profile

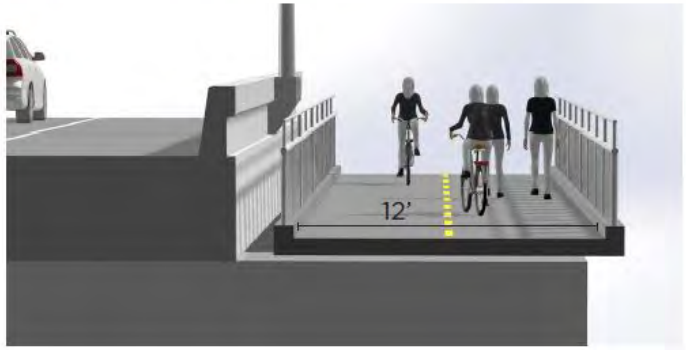

Eye-Level Perspective Multi-Use Pathway

Status of Northern Segment

MUP Crossing Creek – Caltrans Project

- Environmental, Permitting, Design Complete
- Construction underway

MUP on Old Redwood Highway – In the City of Larkspur

- Environmental & Design underway

Funding Plan

- Regional Measure 2
- SB1 Local Partnership Program (LPP)
- Federal Funds (CMAQ)
- Bay Area Air Quality Management District
- TAM Measure A

Project Schedule

1. Corte Madera Creek Bridge Section (Caltrans)
   Begin Construction – February 16, 2021
   Open for Public Use – Early 2022

2. Old Redwood Highway Section (Larkspur)
   Finish Design – 2021
   Construction Summer 2022 (Coordinate Schedule with City of Larkspur)

3. Southern Segment
   On hold pending identification of funding sources